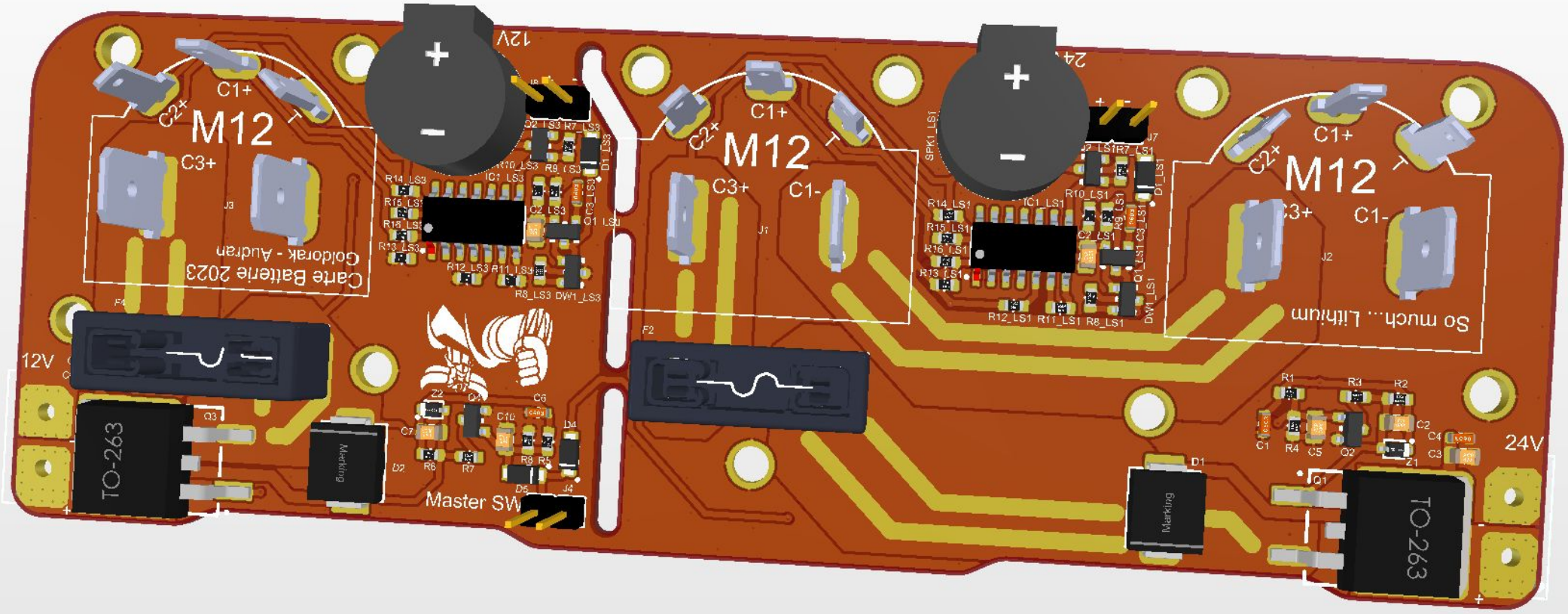
24V
12V
TO-263
Marking
D1
Q1
Z1
C1
R4
Q5
Q2
C2
C4
C3
R1
R3
R2
M12
C1+
C2+
C3+
C1-
J2
So much... Lithium
F2
J1
M12
C1+
C2+
C3+
C1-
SPK1_LS1
R14_LS1
R15_LS1
R16_LS1
R13_LS1
IC1_LS1
R10_LS1
R9_LS1
C2_LS1
C3_LS1
Q1_LS1
DW1_LS1
R12_LS1
R11_LS1
R8_LS1
D1_LS1
R7_LS1
J7
M12
C1+
C2+
C3+
C1-
J3
Carte Batterie 2023
Goldorak - Audran
F4
R14_LS3
R15_LS3
R16_LS3
R13_LS3
IC1_LS3
R10_LS3
R9_LS3
C2_LS3
Q1_LS3
R12_LS3
R11_LS3
R8_LS3
DW1_LS3
D1_LS3
R7_LS3
J8
Z2
Q4
C6
C7
C10
D4
D2
R6
R7
R8
R5
D5
J4
Master SW
Q3
Marking
TO-263
12V

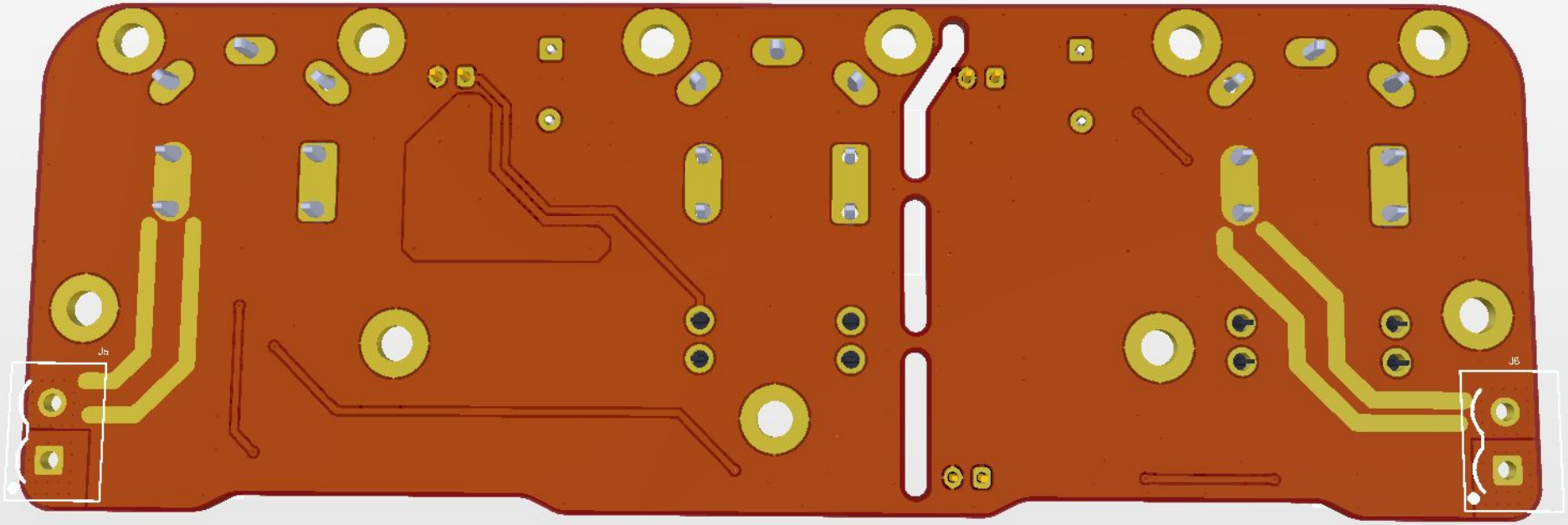
J5
J6

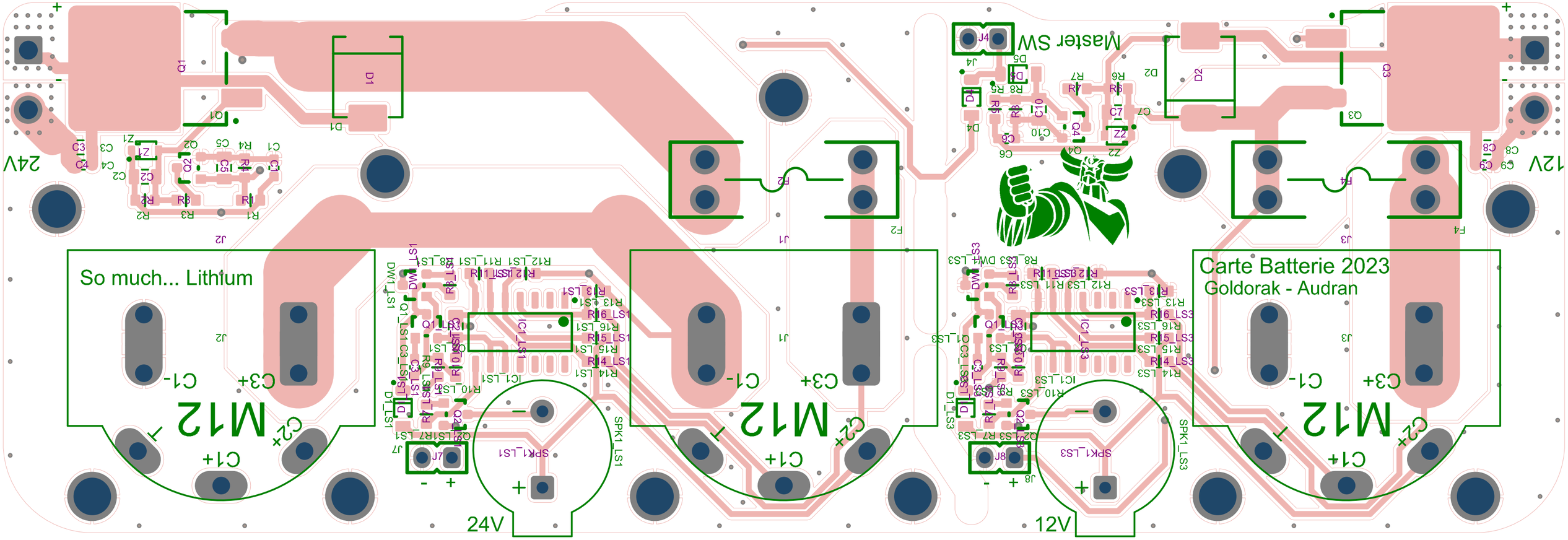
Carte Batterie 2023
Goldorak - Audran
So much... Lithium
Master SW
24V
12V
M12
C1-
C3+
C1+
C2+

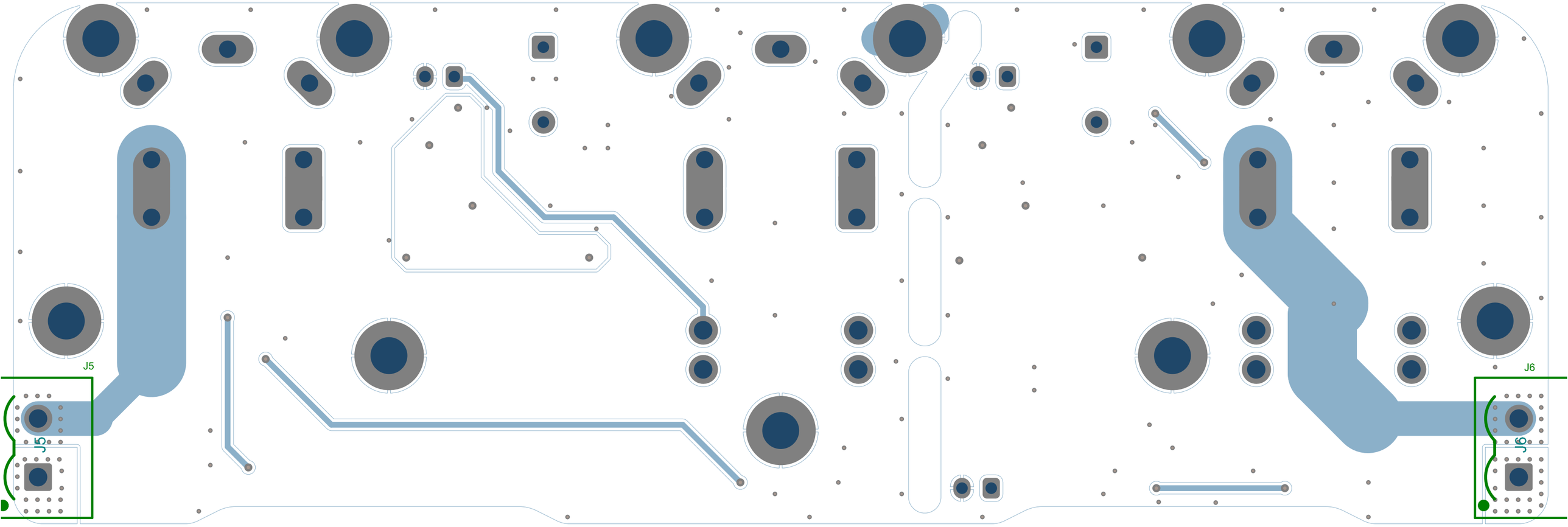
J5
J5
J6
J6