TO-263
Marking
Ctrl Alim
+ 5L
+ 5P
+ 2V
Capt. Out
RESET
SM1
SM2
SM3
SM_L
Ctrl Alim
FTDI
YYXX-A
XXXXXXXXXXX
FT232RL
Carte Capteur
Carte Clavier
Controle Propulsion
Capteurs IR
Enc P1
Enc P2
Enc Aux 1
Enc Aux 2
Dynamixel
SPI Gyro
CAN
Snap
J152
C150
C151
5P
GND
Ser V1
Capt1
Capt2
Ser V2
GND
5P
JL_CJLCJLC

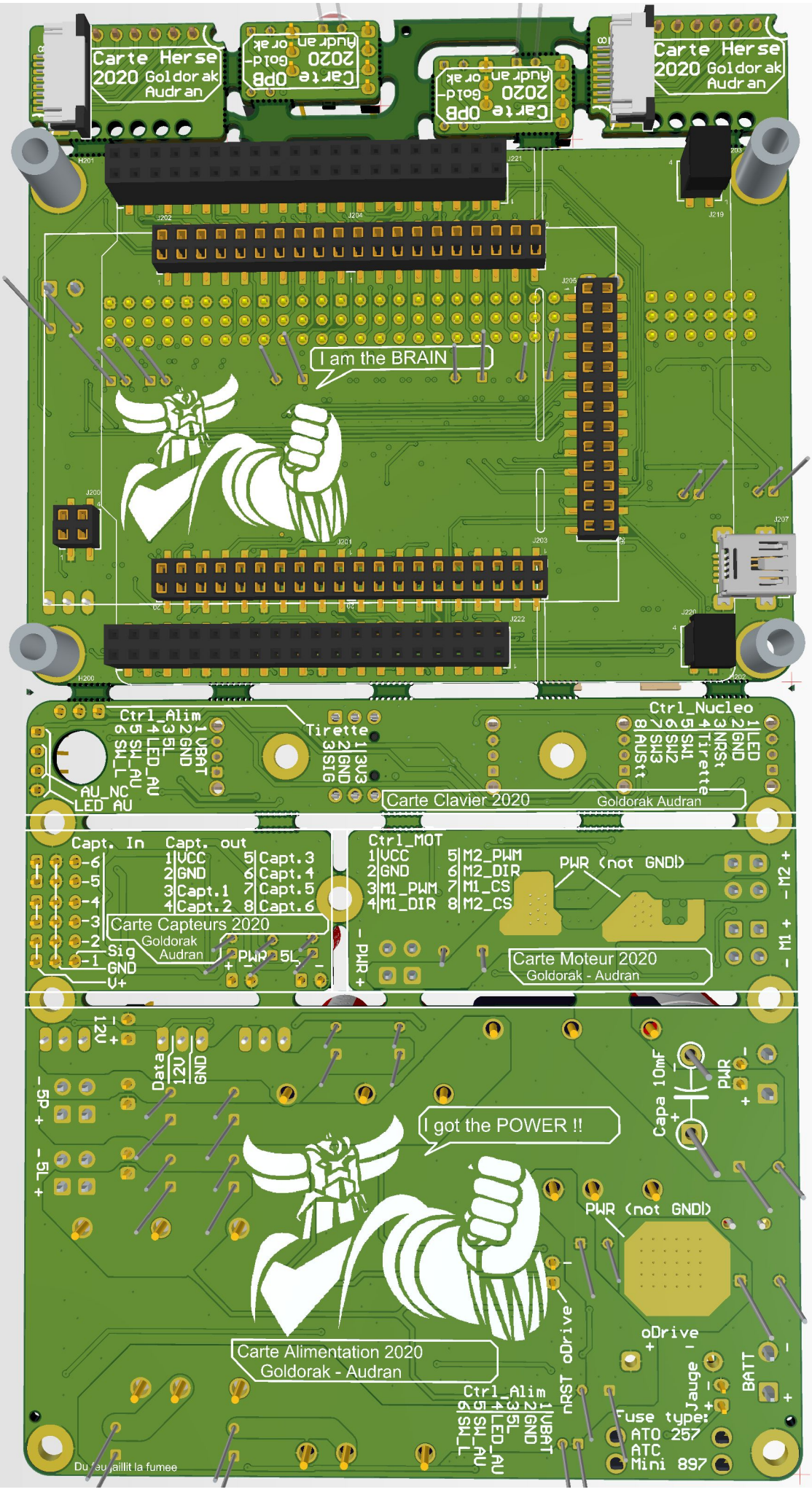
Carte Herse 2020 Goldorak Audran
Carte OPB 2020 Goldorak Audran
I am the BRAIN
Ctrl_Alim
1 VBAT
2 GND
3 5L
4 LED_AU
5 SH_AU
6 SH_L
AU_NC
LED AU
Tirette
1 3V3
2 GND
3 SIG
Ctrl_Nucleo
1 LED
2 GND
3 NRST
4 Tirette
5 SH1
6 SH2
7 SH3
8 AUSTT
Carte Clavier 2020
Goldorak Audran
Capt. In
-6
-5
-4
-3
-2
-1
Sig
GND
V+
Capt. out
1 VCC
2 GND
3 Capt.1
4 Capt.2
5 Capt.3
6 Capt.4
7 Capt.5
8 Capt.6
Carte Capteurs 2020
Goldorak
Audran
PWR 5L
Ctrl_MOT
1 VCC
2 GND
3 M1_PWM
4 M1_DIR
5 M2_PWM
6 M2_DIR
7 M1_CS
8 M2_CS
PWR (not GND)
PWR
Carte Moteur 2020
Goldorak - Audran
- M2 +
- M1 +
12V
Data
12V
GND
- 5P +
- 5L +
I got the POWER !!
Capa 10mF
PWR
PWR (not GND)
oDrive
Carte Alimentation 2020
Goldorak - Audran
nRST oDrive
Ctrl_Alim
1 VBAT
2 GND
3 5L
4 LED_AU
5 SH_AU
6 SH_L
Jauge
BATT
Fuse type:
ATO 257
ATC
Mini 897
Du feu jaillit la fumee

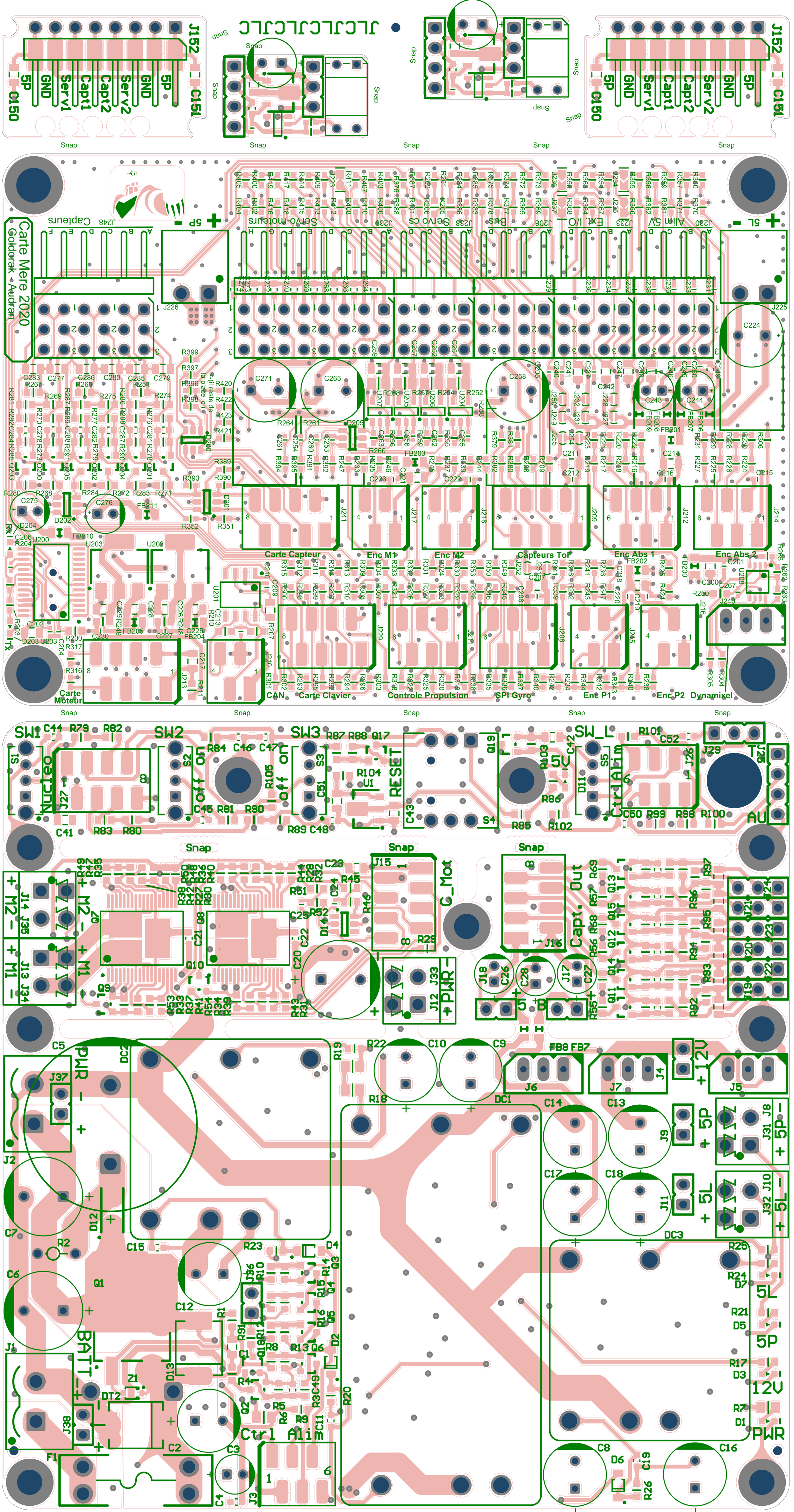
Carte Mere 2020
Goldorak + Audran
Capteurs
Servo-moteurs
Servo CS
Bus
Ext I/O
Alim 5V
Carte Capteur
Enc M1
Enc M2
Capteurs ToF
Enc Abs 1
Enc Abs 2
Carte Moteur
CAN
Carte Clavier
Controle Propulsion
SPI Gyro
Enc P1
Enc P2
Dynamixel
Nucleo
Off on
RESET
CtrlAlim
G_Mot
Capt. Out
M2
M1
PWR
BATT
Ctrl Ali
5L
5P
12V
PWR

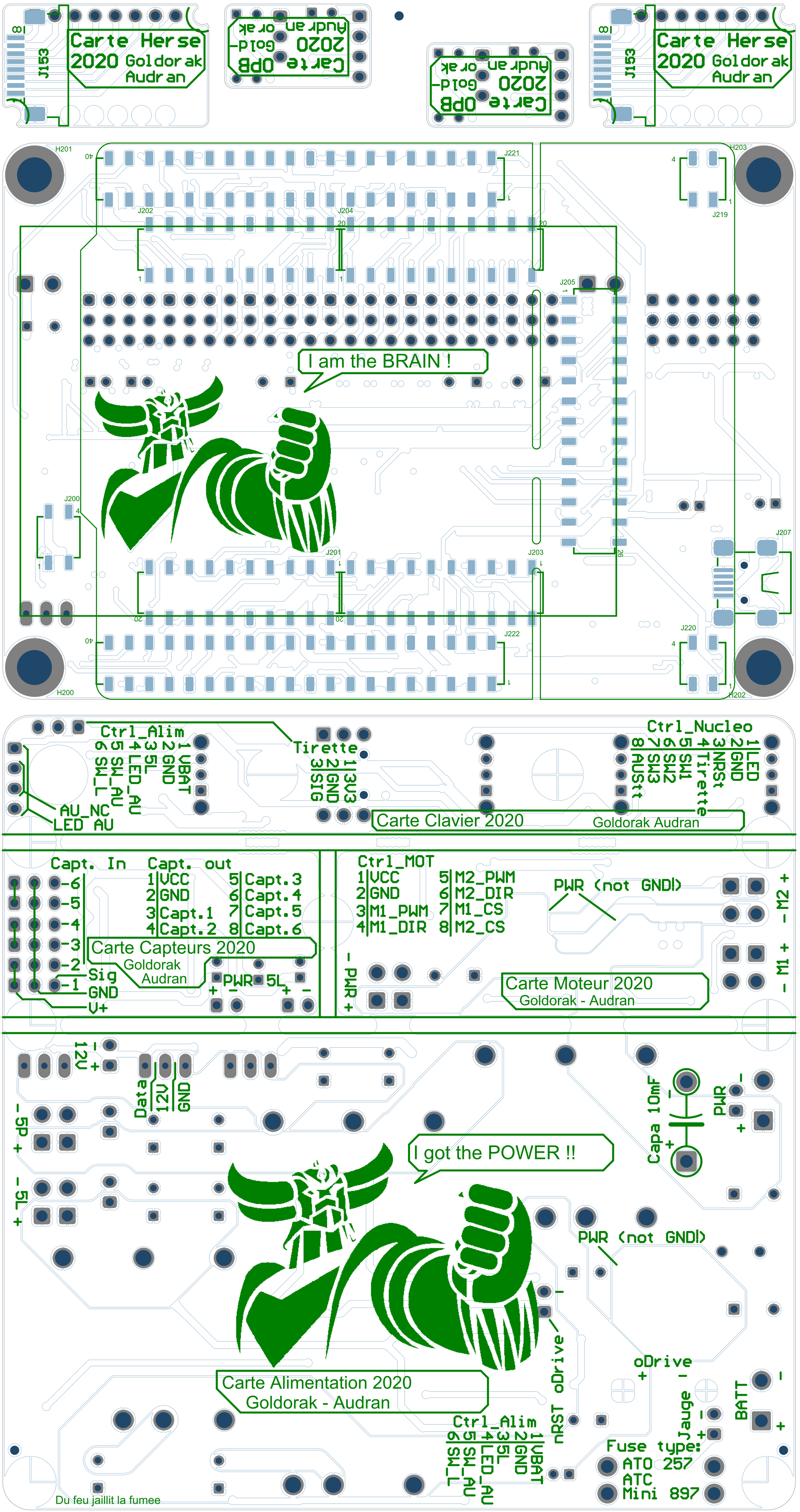
Carte Herse 2020 Goldorak Audran
J153
Carte OPB 2020 Gold-Audran orak
I am the BRAIN !
H201
H200
H202
H203
J200
J201
J202
J203
J204
J205
J207
J219
J220
J221
J222
Ctrl_Alim
1 VBAT
2 GND
3 5L
4 LED_AU
5 SW_AU
6 SW_L
AU_NC
LED AU
Tirette
1 3V3
2 GND
3 SIG
Carte Clavier 2020
Goldorak Audran
Ctrl_Nucleo
1 LED
2 GND
3 NRSt
4 Tirette
5 SW1
6 SW2
7 SW3
8 AUSt
Capt. In
-6
-5
-4
-3
-2
-1
Sig
GND
V+
Capt. out
1 VCC
2 GND
3 Capt.1
4 Capt.2
5 Capt.3
6 Capt.4
7 Capt.5
8 Capt.6
Carte Capteurs 2020
Goldorak
Audran
PWR
5L
Ctrl_MOT
1 VCC
2 GND
3 M1_PWM
4 M1_DIR
5 M2_PWM
6 M2_DIR
7 M1_CS
8 M2_CS
PWR (not GND!)
- PWR +
- M1 +
- M2 +
Carte Moteur 2020
Goldorak - Audran
12V
Data
12V
GND
- 5P +
- 5L +
Capa 10mF
PWR
I got the POWER !!
PWR (not GND!)
oDrive
nRST oDrive
Jauge
BATT
Fuse type:
ATO 257
ATC
Mini 897
Carte Alimentation 2020
Goldorak - Audran
Du feu jaillit la fumee

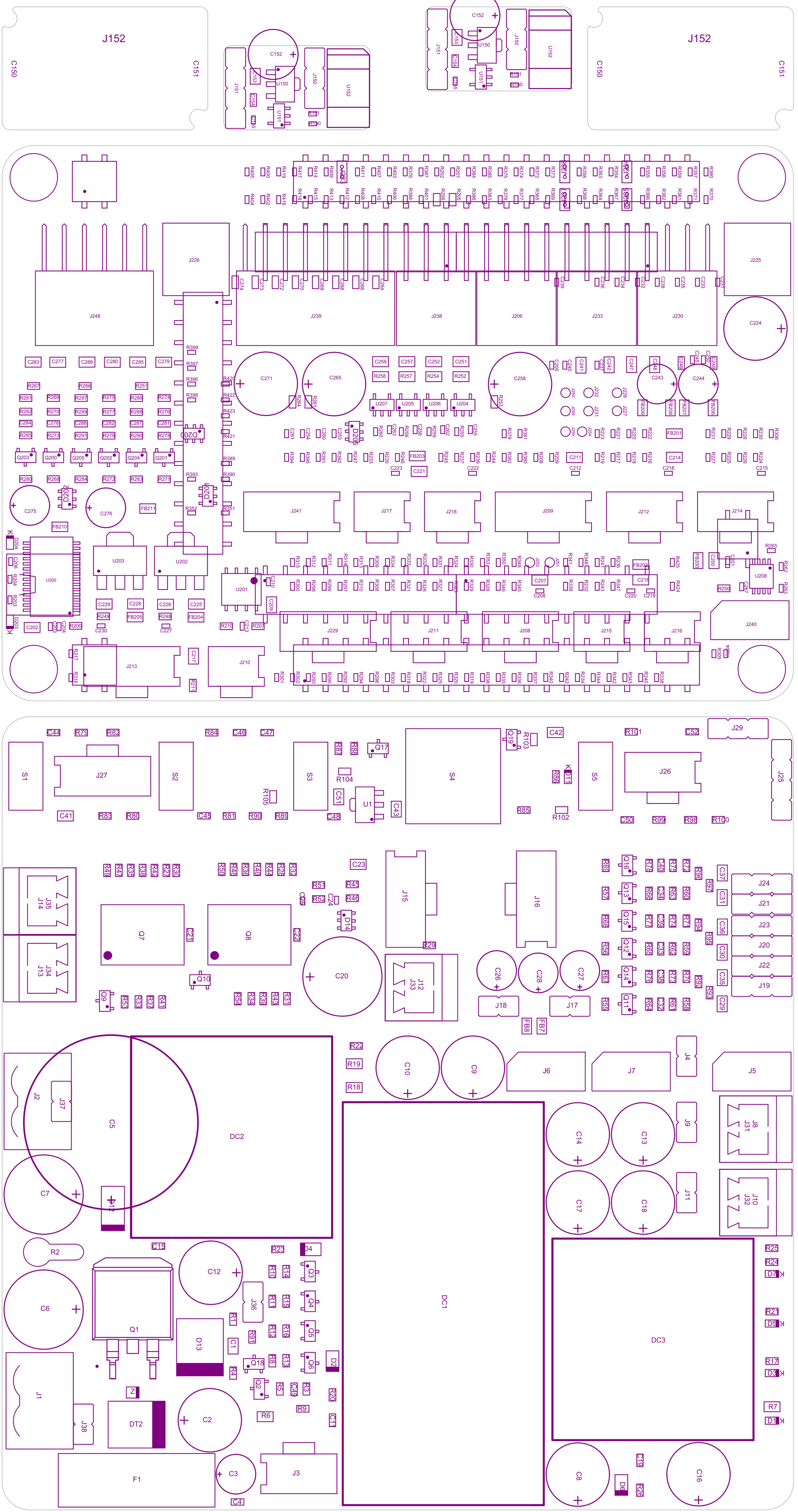
J152
C150
C151
C152
J151
J150
U150
U151
U152
J248
J226
J225
J239
J238
J206
J233
J230
C224
C271
C265
C258
C243
C244
U200
U203
U202
U201
U208
J241
J217
J218
J209
J212
J214
J229
J211
J208
J215
J216
J240
J213
J210
S1
J27
S2
S3
S4
S5
J26
J29
J25
J35
J14
J34
J13
Q7
Q8
J15
J16
J12
J33
C20
C26
C28
C27
J18
J17
J24
J21
J23
J20
J22
J19
J2
J37
C5
DC2
C7
C10
C9
J6
J7
J4
J5
J9
J8
J31
C14
C13
J11
J10
J32
C17
C18
R2
C6
Q1
C12
J36
D13
DC1
DC3
J1
J38
DT2
C2
F1
C3
J3
C8
C16

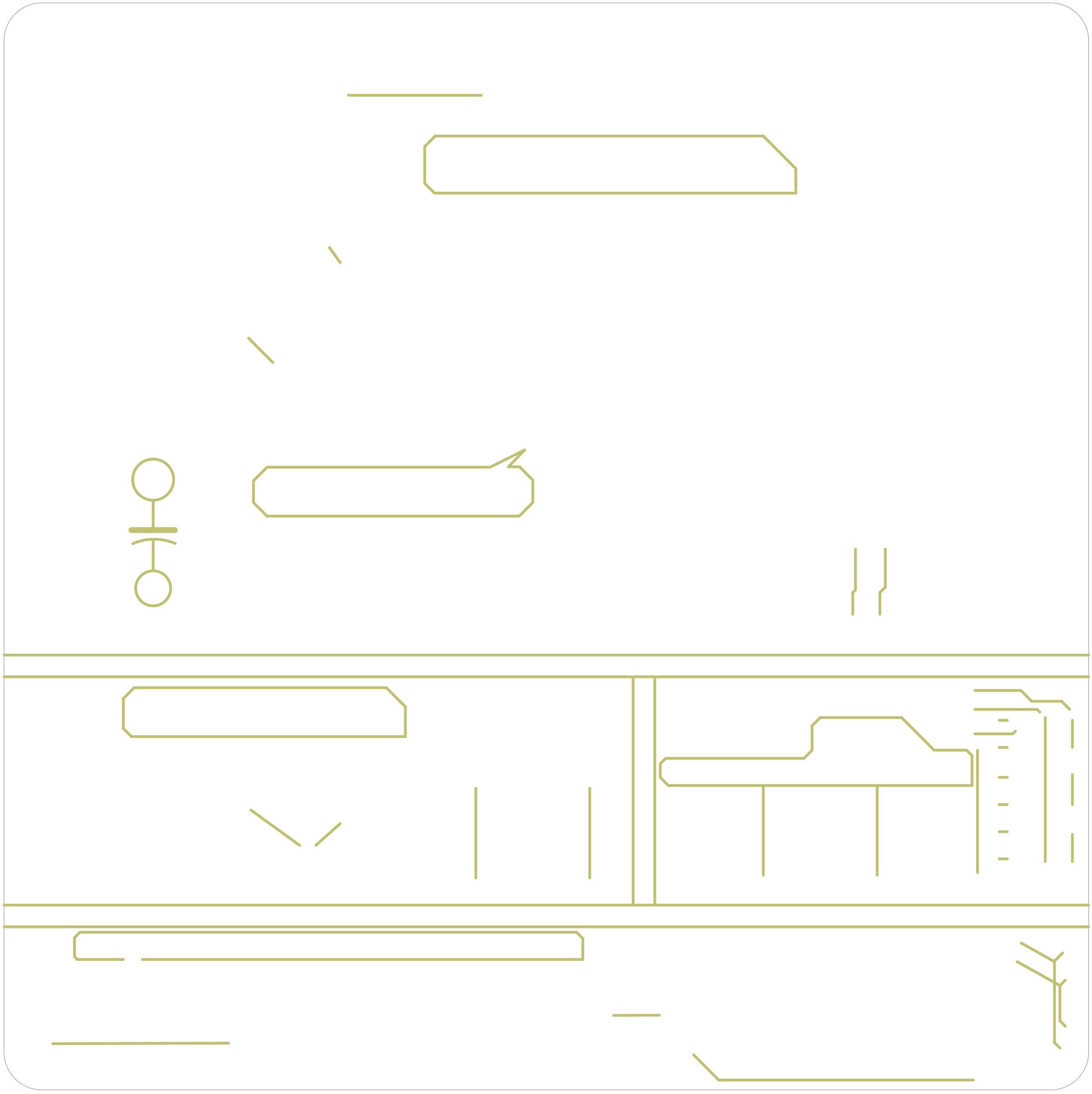

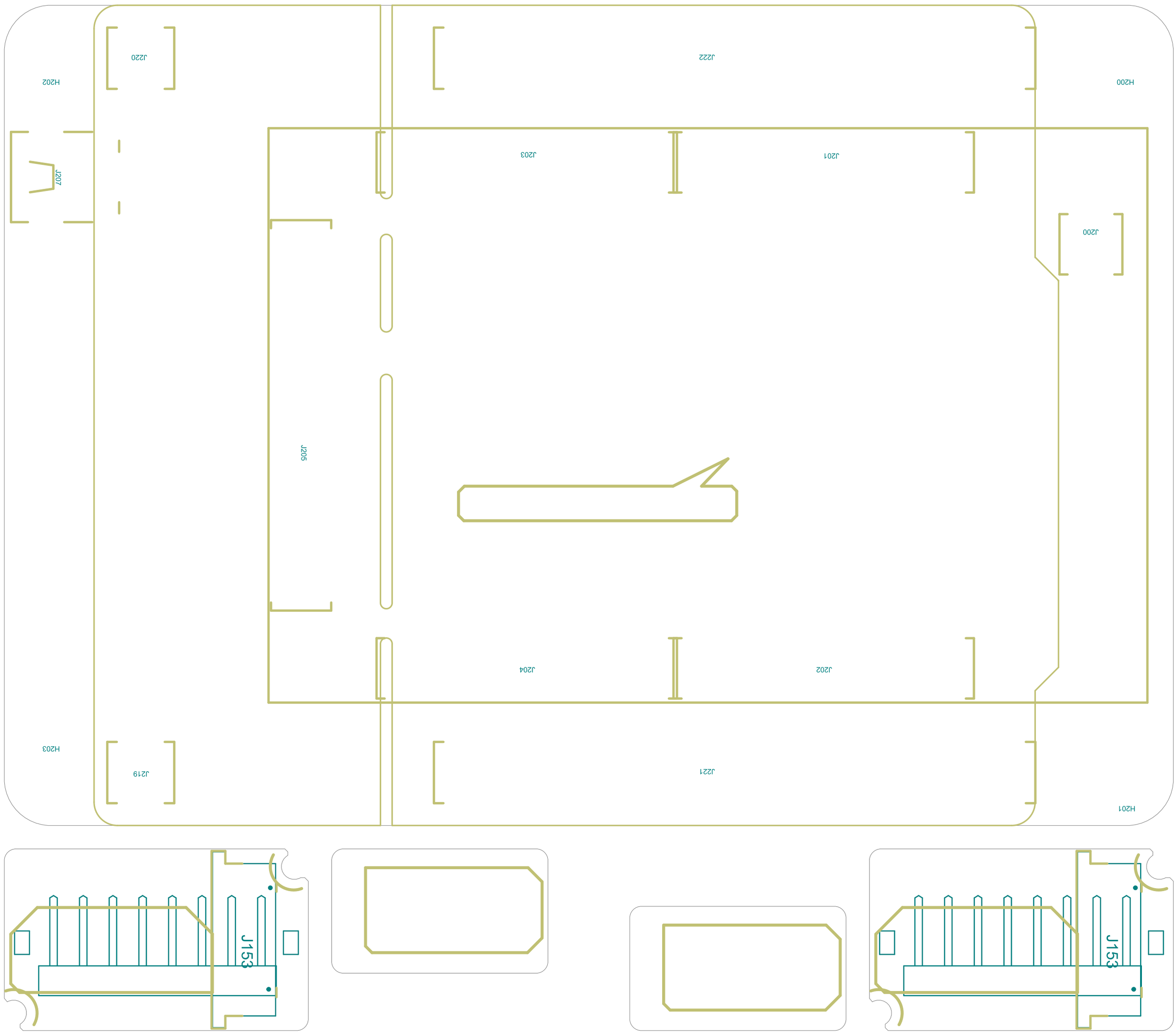
H202
J220
J222
H200
J207
J203
J201
J200
J205
J204
J202
H203
J219
J221
H201
J153
J153