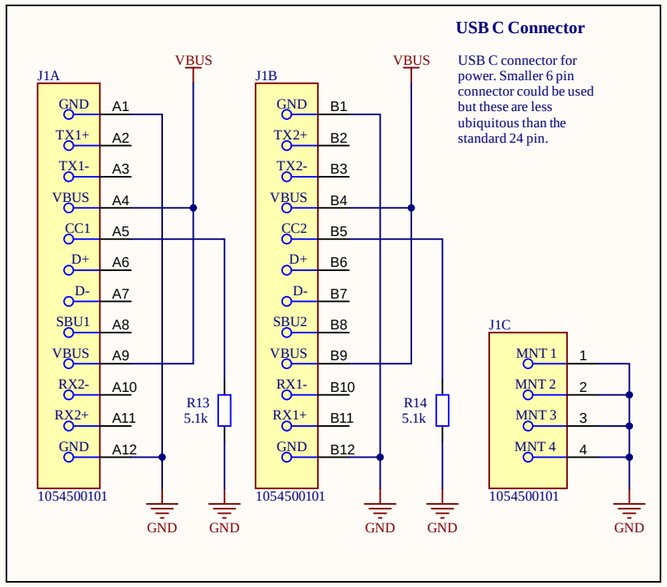

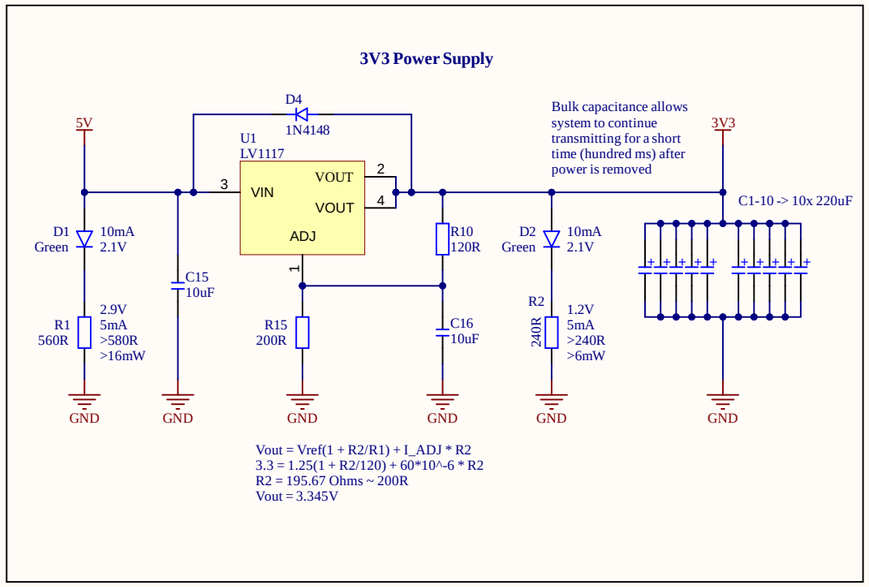

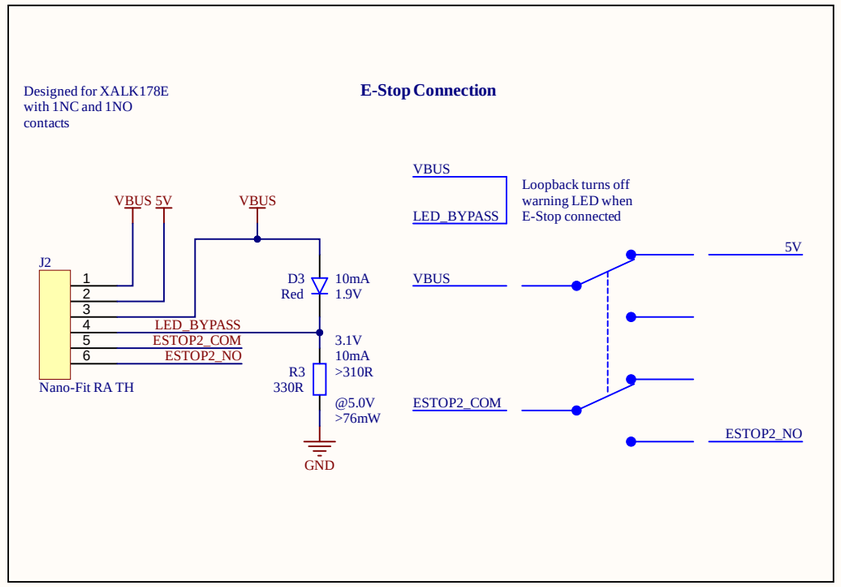

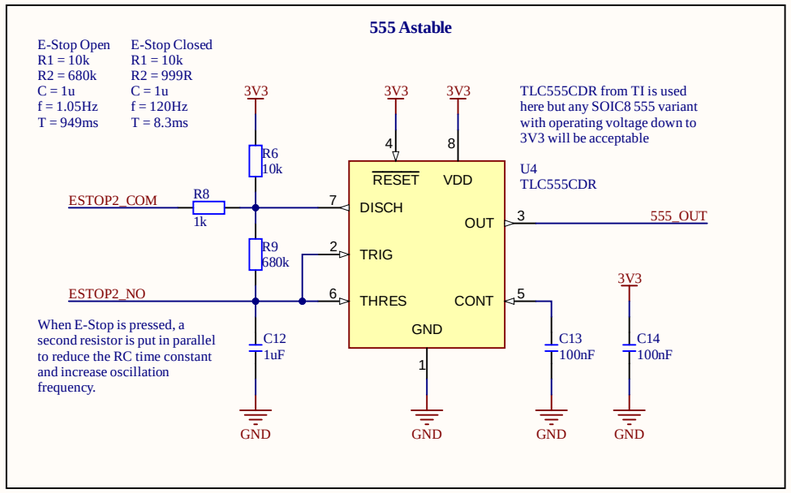

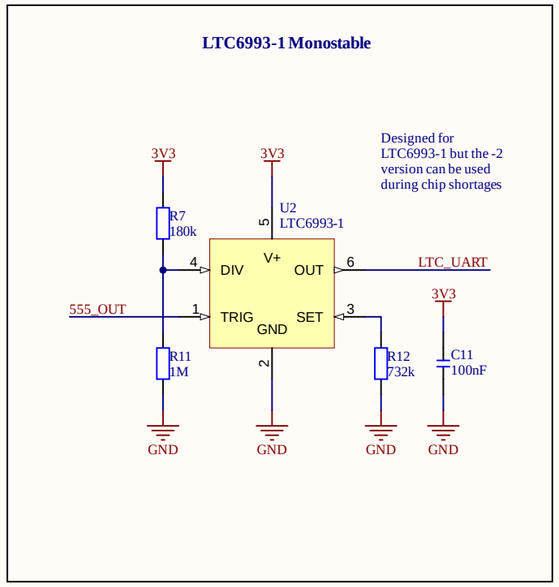

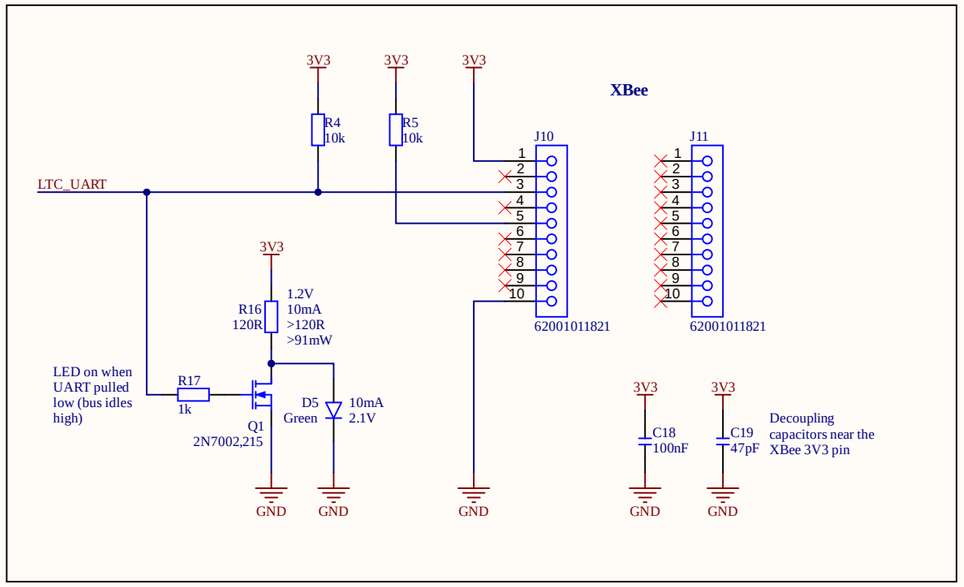

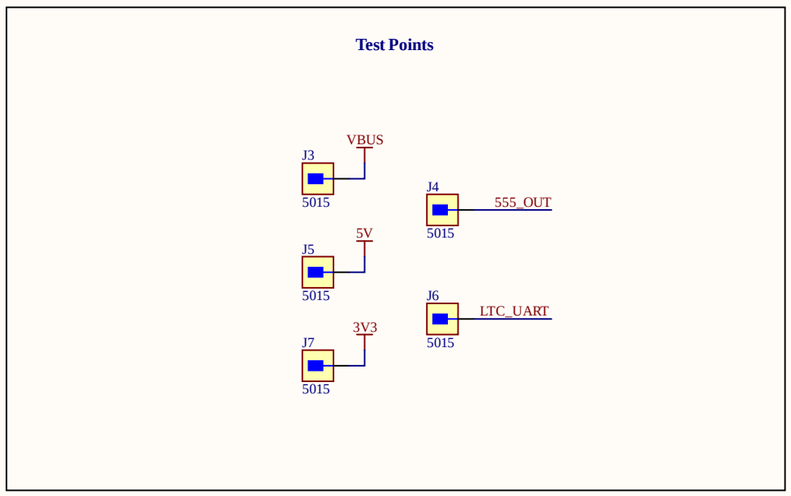

CREATIVE COMMONS PUBLIC LICENSE:

CC BY-NC 4.0

THIS DESIGN IS BEING PROVIDED FOR NON-COMMERCIAL USE ONLY. THE USE OF GRACE HOPPER'S NAME IN CONNECTION WITH THE DESIGN IS NOT INTENDED TO IMPLY THAT GRACE HOPPER SPONSORS OR ENDORSES THE DESIGN, GOOGLE LLC, OR ANY OF GOOGLE LLC'S PRODUCTS OR SERVICES.

BARKOUR ROBOT

GRACE TRANSMITTER

APPROVED	GOOGLE LLC
DWG NO	710-03966-01
RELEASED	2024/05/09
FILE	Grace.SchDoc

Grace.SchDoc

Google DeepMind

1600 AMPHITHEATRE PARKWAY
MOUNTAIN VIEW CA 94043

SIZE A3 | SHEET 1 OF 1