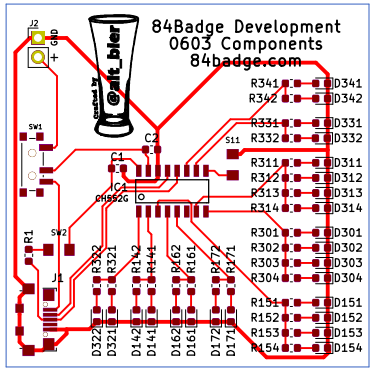

84badge.com
Created by @alt_bier a.k.a. Richard Gowen

Sheet:
File: dev.kicad_pcb

Title: 84_Badge

Size: USLetter	Date: 2020-03-21	Rev:
KiCad E.D.A. kicad (5.1.0)-1		Id: 1/1