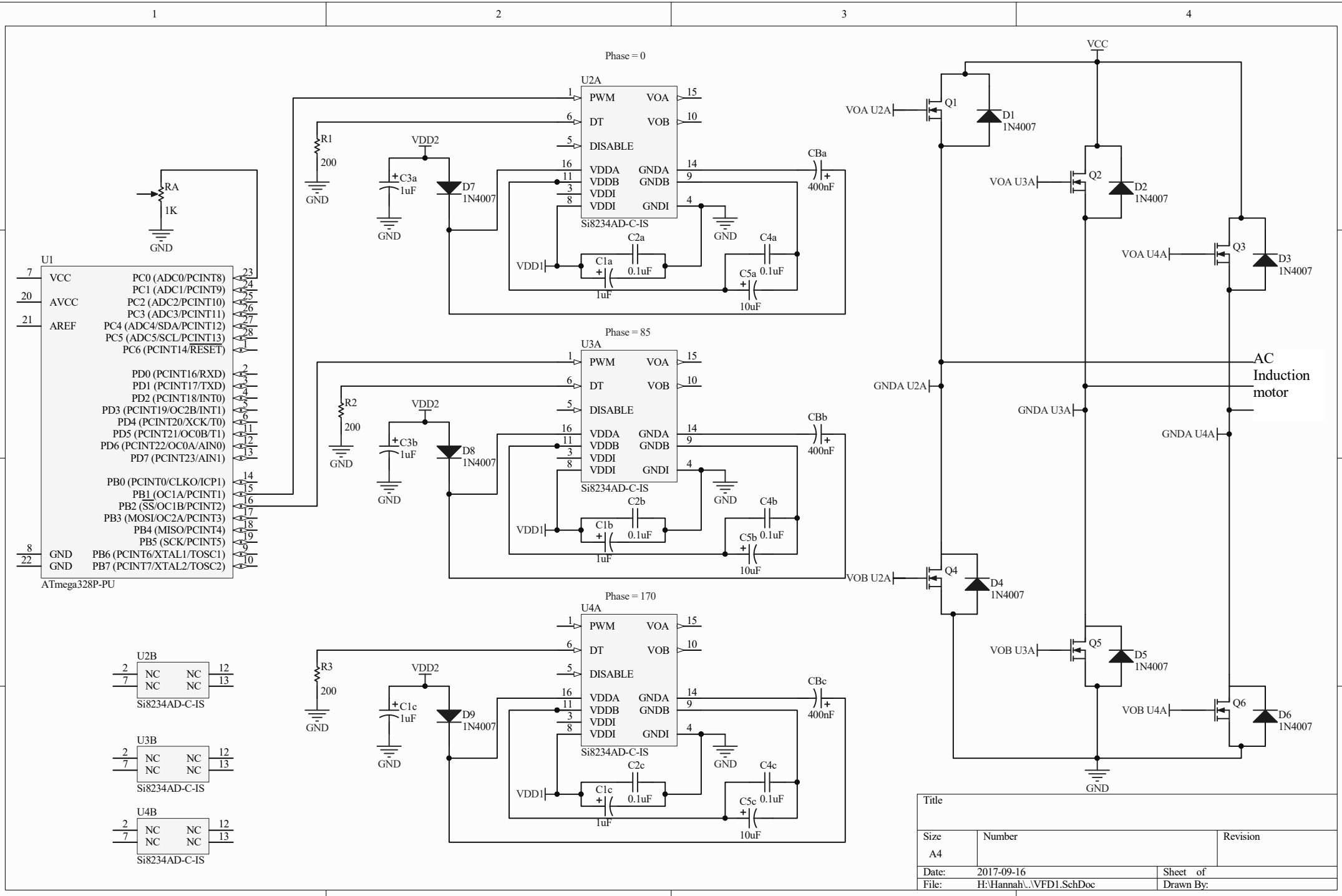
Phase = 0
Phase = 85
Phase = 170
U1
ATmega328P-PU
VCC
AVCC
AREF
GND
PC0 (ADC0/PCINT8)
PC1 (ADC1/PCINT9)
PC2 (ADC2/PCINT10)
PC3 (ADC3/PCINT11)
PC4 (ADC4/SDA/PCINT12)
PC5 (ADC5/SCL/PCINT13)
PC6 (PCINT14/RESET)
PD0 (PCINT16/RXD)
PD1 (PCINT17/TXD)
PD2 (PCINT18/INT0)
PD3 (PCINT19/OC2B/INT1)
PD4 (PCINT20/XCK/T0)
PD5 (PCINT21/OC0B/T1)
PD6 (PCINT22/OC0A/AIN0)
PD7 (PCINT23/AIN1)
PB0 (PCINT0/CLKO/ICP1)
PB1 (OC1A/PCINT1)
PB2 (SS/OC1B/PCINT2)
PB3 (MOSI/OC2A/PCINT3)
PB4 (MISO/PCINT4)
PB5 (SCK/PCINT5)
PB6 (PCINT6/XTAL1/TOSC1)
PB7 (PCINT7/XTAL2/TOSC2)
RA
1K
U2A
U3A
U4A
PWM
DT
DISABLE
VDDA
VDDB
VDDI
VOA
VOB
GNDA
GNDB
GNDI
Si8234AD-C-IS
R1
R2
R3
200
VDD2
VDD1
C3a
C3b
C1c
1uF
D7
D8
D9
1N4007
CBa
CBb
CBc
400nF
C2a
C2b
C2c
C1a
C1b
C1c
0.1uF
C4a
C4b
C4c
C5a
C5b
C5c
10uF
U2B
U3B
U4B
NC
VOA U2A
VOA U3A
VOA U4A
VOB U2A
VOB U3A
VOB U4A
Q1
Q2
Q3
Q4
Q5
Q6
D1
D2
D3
D4
D5
D6
GNDA U2A
GNDA U3A
GNDA U4A
AC
Induction
motor
Title
Size
A4
Number
Revision
Date:
2017-09-16
Sheet of
File:
H:\Hannah\..\VFD1.SchDoc
Drawn By: