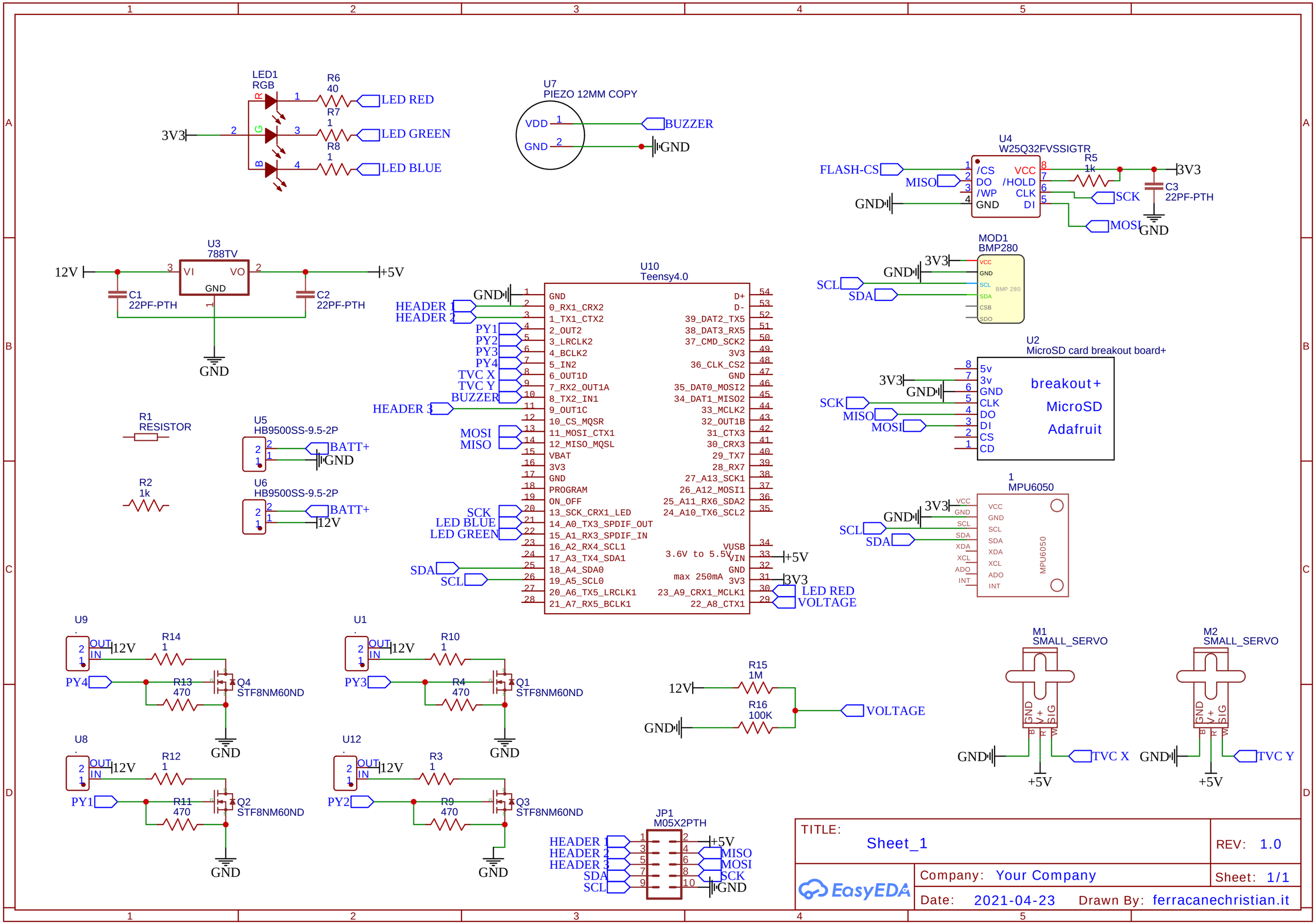
LED1
RGB
R6
40
R7
1
R8
1
3V3
LED RED
LED GREEN
LED BLUE
U7
PIEZO 12MM COPY
VDD
GND
BUZZER
GND
U4
W25Q32FVSSIGTR
FLASH-CS
MISO
GND
/CS
DO
/WP
GND
VCC
/HOLD
CLK
DI
R5
1k
3V3
C3
22PF-PTH
SCK
MOSI
GND
U3
788TV
12V
VI
VO
GND
+5V
C1
22PF-PTH
C2
22PF-PTH
GND
MOD1
BMP280
3V3
GND
SCL
SDA
VCC
GND
SCL
SDA
CSB
SDO
BMP 280
U10
Teensy4.0
GND
HEADER 1
HEADER 2
PY1
PY2
PY3
PY4
TVC X
TVC Y
BUZZER
HEADER 3
MOSI
MISO
SCK
LED BLUE
LED GREEN
SDA
SCL
GND
0_RX1_CRX2
1_TX1_CTX2
2_OUT2
3_LRCLK2
4_BCLK2
5_IN2
6_OUT1D
7_RX2_OUT1A
8_TX2_IN1
9_OUT1C
10_CS_MQSR
11_MOSI_CTX1
12_MISO_MQSL
VBAT
3V3
GND
PROGRAM
ON_OFF
13_SCK_CRX1_LED
14_A0_TX3_SPDIF_OUT
15_A1_RX3_SPDIF_IN
16_A2_RX4_SCL1
17_A3_TX4_SDA1
18_A4_SDA0
19_A5_SCL0
20_A6_TX5_LRCLK1
21_A7_RX5_BCLK1
D+
D-
39_DAT2_TX5
38_DAT3_RX5
37_CMD_SCK2
3V3
36_CLK_CS2
GND
35_DAT0_MOSI2
34_DAT1_MISO2
33_MCLK2
32_OUT1B
31_CTX3
30_CRX3
29_TX7
28_RX7
27_A13_SCK1
26_A12_MOSI1
25_A11_RX6_SDA2
24_A10_TX6_SCL2
VUSB
3.6V to 5.5V
VIN
GND
max 250mA
3V3
23_A9_CRX1_MCLK1
22_A8_CTX1
+5V
3V3
LED RED
VOLTAGE
U2
MicroSD card breakout board+
3V3
GND
SCK
MISO
MOSI
5v
3v
GND
CLK
DO
DI
CS
CD
breakout+
MicroSD
Adafruit
R1
RESISTOR
R2
1k
U5
HB9500SS-9.5-2P
BATT+
GND
U6
HB9500SS-9.5-2P
BATT+
12V
1
MPU6050
3V3
GND
SCL
SDA
VCC
GND
SCL
SDA
XDA
XCL
ADO
INT
MPU6050
U9
OUT
IN
12V
R14
1
PY4
R13
470
Q4
STF8NM60ND
GND
U1
OUT
IN
12V
R10
1
PY3
R4
470
Q1
STF8NM60ND
GND
U8
OUT
IN
12V
R12
1
PY1
R11
470
Q2
STF8NM60ND
GND
U12
OUT
IN
12V
R3
1
PY2
R9
470
Q3
STF8NM60ND
GND
12V
R15
1M
R16
100K
GND
VOLTAGE
M1
SMALL_SERVO
GND
V+
SIG
GND
TVC X
+5V
M2
SMALL_SERVO
GND
V+
SIG
GND
TVC Y
+5V
JP1
M05X2PTH
HEADER 1
HEADER 2
HEADER 3
SDA
SCL
+5V
MISO
MOSI
SCK
GND
TITLE:
Sheet_1
REV: 1.0
Company: Your Company
Sheet: 1/1
Date: 2021-04-23
Drawn By: ferracanechristian.it
EasyEDA