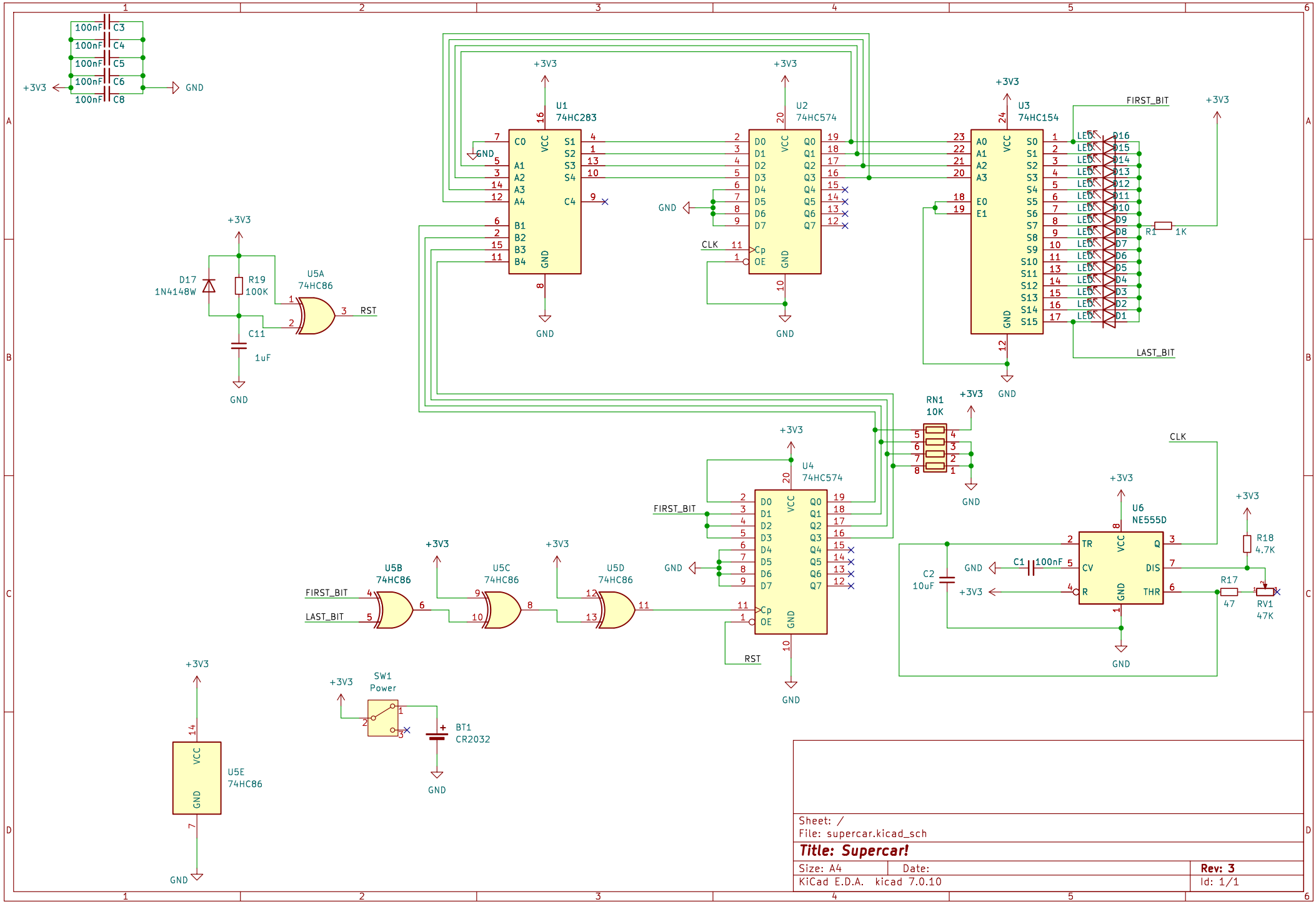
100nF C3
100nF C4
100nF C5
100nF C6
100nF C8
+3V3
GND
U1
74HC283
U2
74HC574
U3
74HC154
U4
74HC574
U5A
74HC86
U5B
74HC86
U5C
74HC86
U5D
74HC86
U5E
74HC86
U6
NE555D
D17
1N4148W
R19
100K
C11
1uF
RST
FIRST_BIT
LAST_BIT
CLK
RN1
10K
R1
1K
C1
100nF
C2
10uF
R17
47
R18
4.7K
RV1
47K
SW1
Power
BT1
CR2032
Sheet: /
File: supercar.kicad_sch
Title: Supercar!
Size: A4
Date:
Rev: 3
KiCad E.D.A. kicad 7.0.10
Id: 1/1