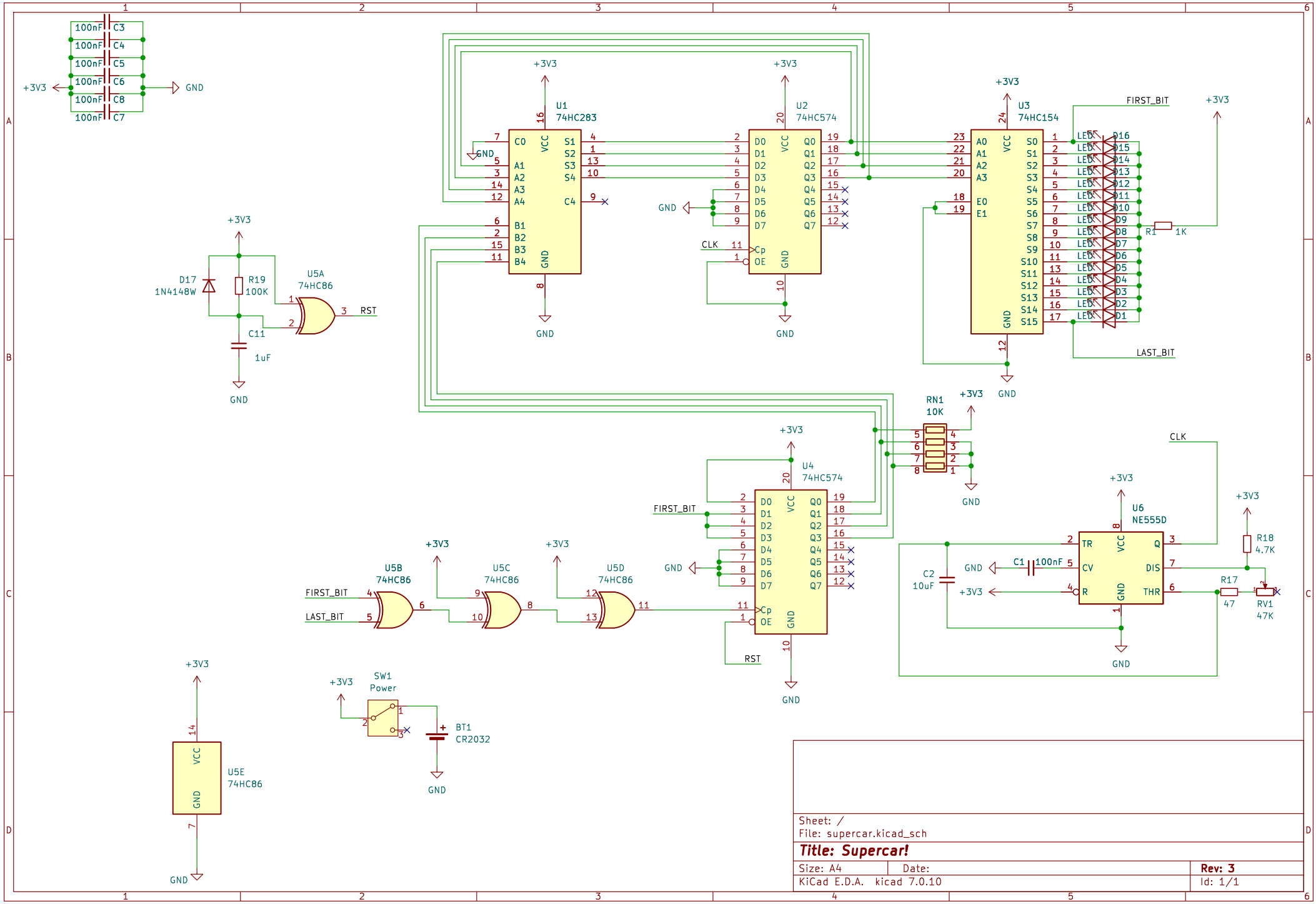

Sheet: /
File: supercar.kicad_sch

Title: Supercar!

Size: A4	Date:	Rev: 3
KiCad E.D.A. kicad 7.0.10		Id: 1/1