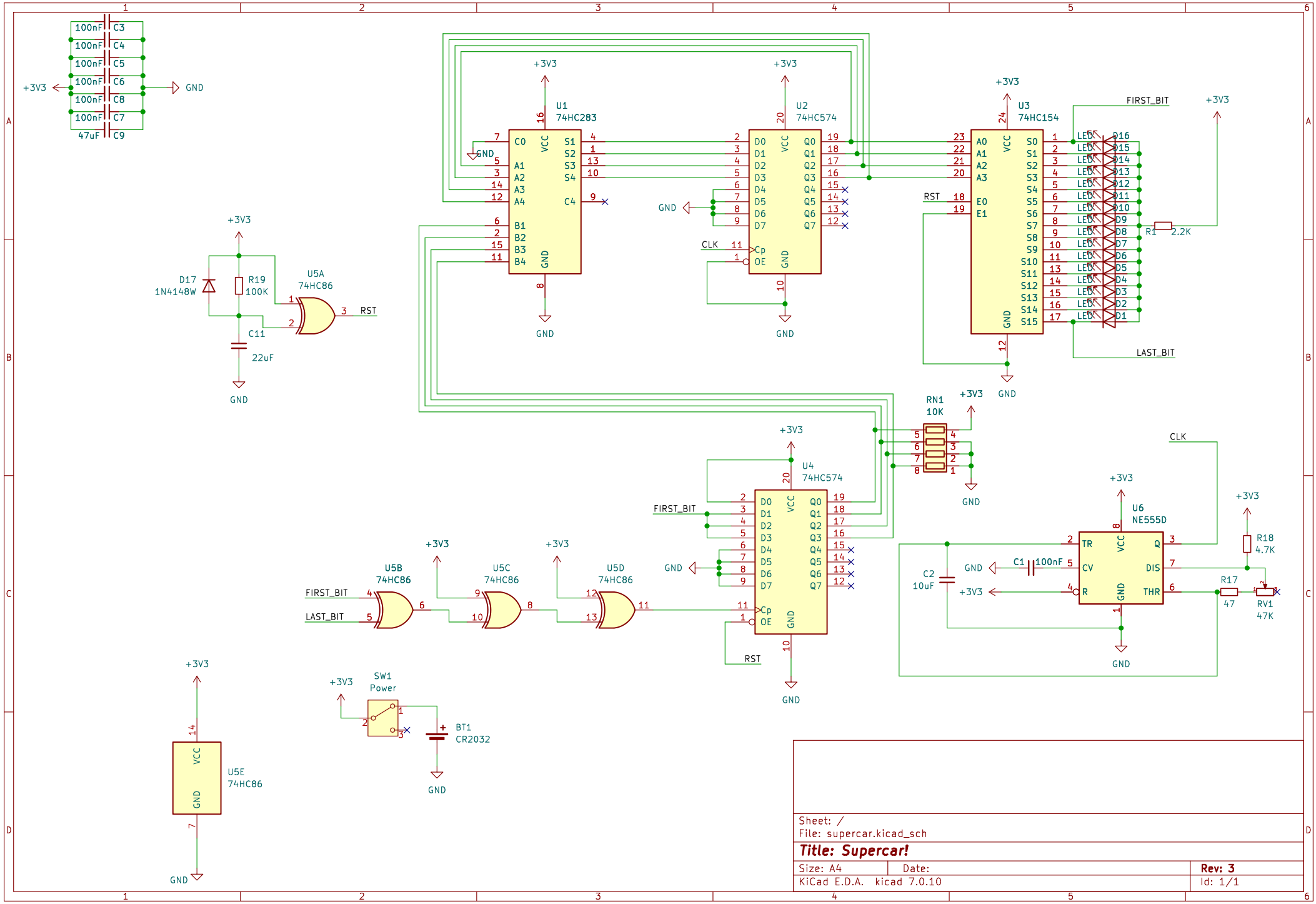
100nF C3
100nF C4
100nF C5
100nF C6
100nF C8
100nF C7
47uF C9
+3V3
GND
U1
74HC283
U2
74HC574
U3
74HC154
FIRST_BIT
LAST_BIT
CLK
RST
R1 2.2K
D17
1N4148W
R19
100K
C11
22uF
U5A
74HC86
RN1
10K
U4
74HC574
U5B
74HC86
U5C
74HC86
U5D
74HC86
U6
NE555D
C1 100nF
C2
10uF
R18
4.7K
R17
47
RV1
47K
SW1
Power
BT1
CR2032
U5E
74HC86
Sheet: /
File: supercar.kicad_sch
Title: Supercar!
Size: A4
Date:
Rev: 3
KiCad E.D.A. kicad 7.0.10
Id: 1/1