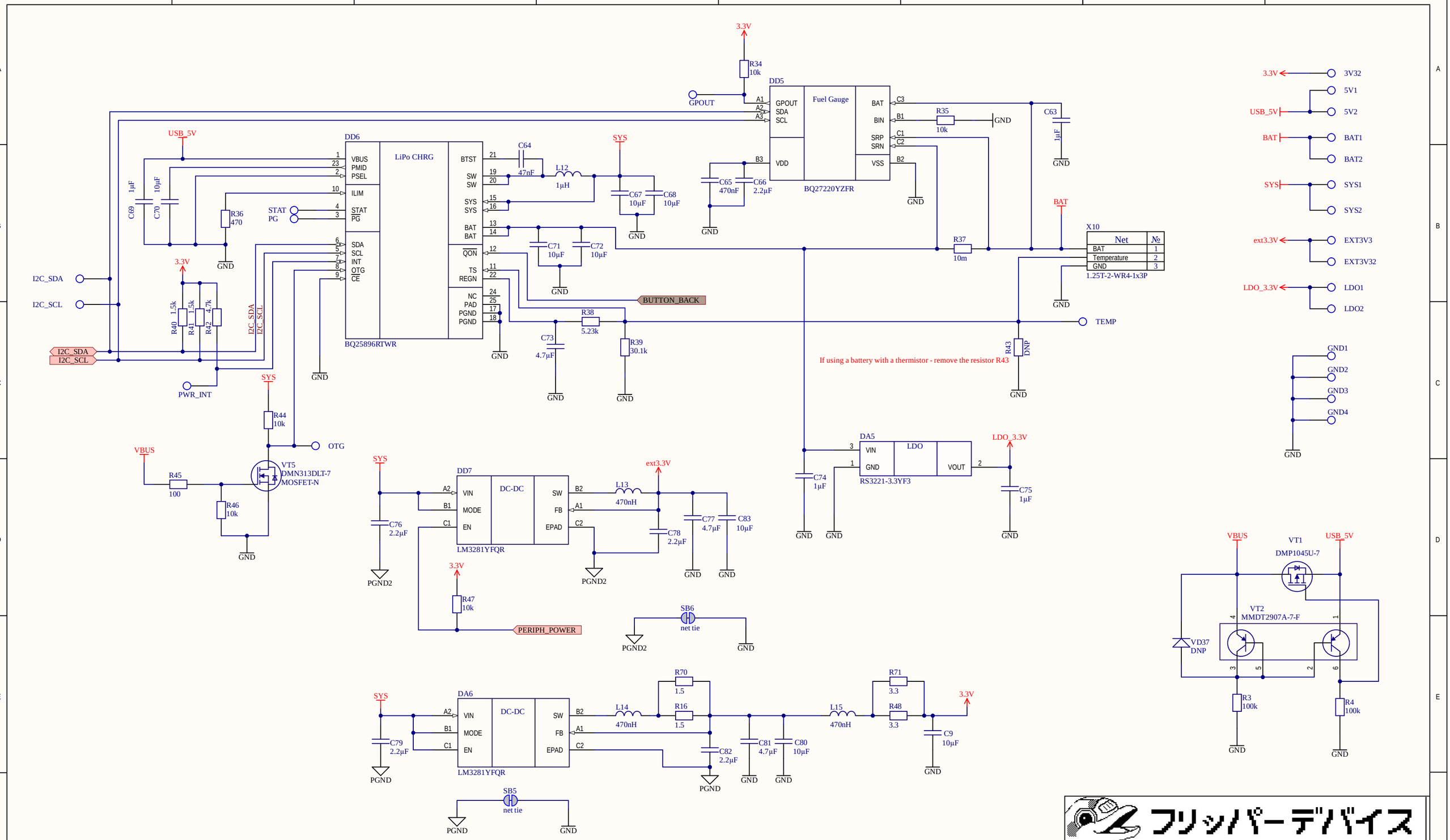


フリッパーデバイス

| | | |
|---|---|---|
| Title: | | Flipper Devices Inc.<br>2803 Philadelphia Pike Suite B #551<br>Claymont, DE 19703, USA |
| Project: | Rev.: | |
| Date: 2/8/2023 | Size: A3 | Sheet 2 of 7 |