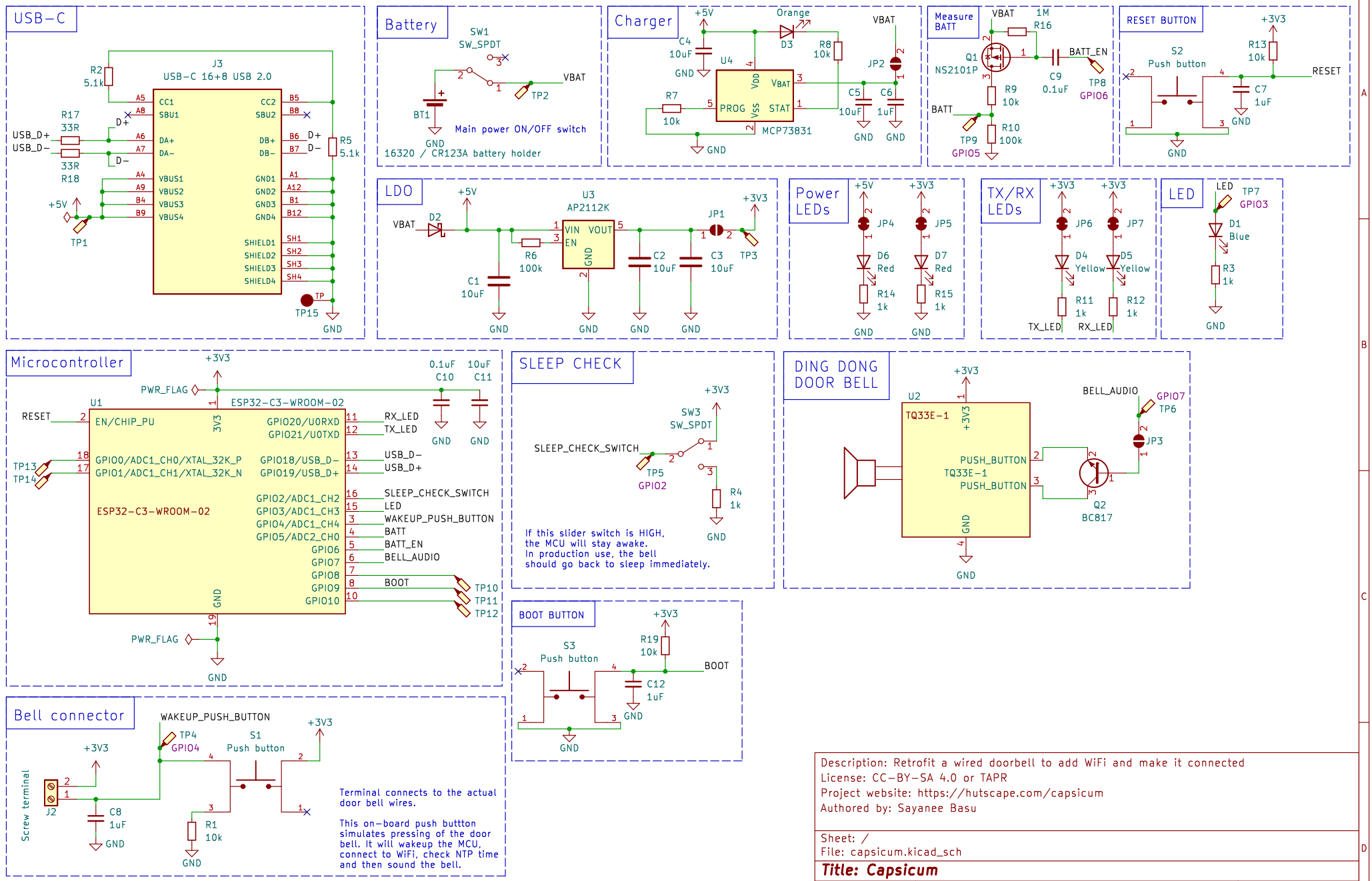

Description: Retrofit a wired doorbell to add WiFi and make it connected
License: CC-BY-SA 4.0 or TAPR
Project website: https://hutscape.com/capsicum
Authored by: Sayanee Basu

Sheet: /
File: capsicum.kicad_sch

Title: Capsicum

Size: A4	Date: 2024-01-02	Rev:
KiCad E.D.A. kicad 7.0.8		Id: 1/1