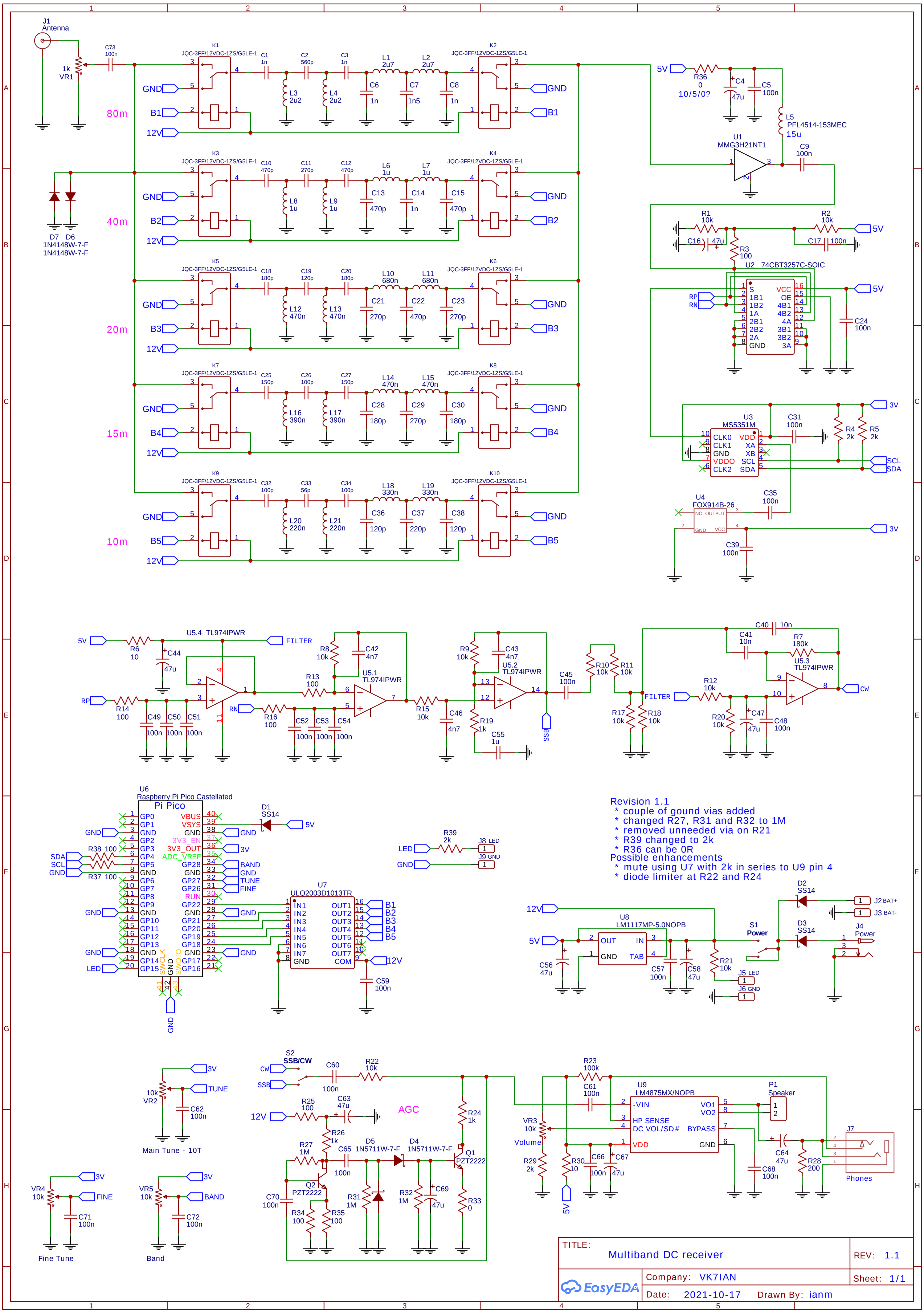
J1
Antenna
1k
VR1
C73
100n
80m
40m
20m
15m
10m
K1
K2
K3
K4
K5
K6
K7
K8
K9
K10
JQC-3FF/12VDC-1ZS/G5LE-1
GND
B1
B2
B3
B4
B5
12V
D7 D6
1N4148W-7-F
1N4148W-7-F
5V
R36
0
10/5/0?
C4
47u
C5
100n
L5
PFL4514-153MEC
15u
U1
MMG3H21NT1
C9
100n
R1
10k
R2
10k
C16
47u
C17
100n
R3
100
U2 74CBT3257C-SOIC
RP
RN
C24
100n
3V
U3
MS5351M
C31
100n
R4
2k
R5
2k
SCL
SDA
U4
FOX914B-26
C35
100n
C39
100n
U5.4 TL974IPWR
FILTER
R6
10
C44
47u
R14
100
C49
C50
C51
100n
R8
10k
C42
4n7
U5.1
TL974IPWR
R13
100
R16
100
C52
C53
C54
R15
10k
C46
4n7
R9
10k
C43
4n7
U5.2
TL974IPWR
R19
1k
C55
1u
SSB
C45
100n
R10
10k
R11
10k
R17
10k
R18
10k
C40
10n
C41
10n
R7
180k
U5.3
TL974IPWR
R12
10k
R20
10k
C47
47u
C48
100n
CW
U6
Raspberry Pi Pico Castellated
Pi Pico
D1
SS14
R38 100
R37 100
SDA
SCL
LED
U7
ULQ2003D1013TR
C59
100n
R39
2k
J8 LED
J9 GND
Revision 1.1
* couple of gound vias added
* changed R27, R31 and R32 to 1M
* removed unneeded via on R21
* R39 changed to 2k
* R36 can be 0R
Possible enhancements
* mute using U7 with 2k in series to U9 pin 4
* diode limiter at R22 and R24
D2
SS14
D3
SS14
J2 BAT+
J3 BAT-
J4
Power
S1
Power
U8
LM1117MP-5.0NOPB
C56
47u
C57
100n
C58
47u
R21
10k
J5 LED
J6 GND
S2
SSB/CW
C60
100n
R22
10k
R25
100
C63
47u
AGC
R26
1k
R27
1M
C65
100n
D5
1N5711W-7-F
D4
1N5711W-7-F
Q1
PZT2222
Q2
PZT2222
R24
1k
R33
0
C70
100n
R31
1M
R32
1M
C69
47u
R34
100
R35
100
10k
VR2
C62
100n
Main Tune - 10T
VR4
10k
C71
100n
Fine Tune
VR5
10k
C72
100n
Band
R23
100k
C61
100n
U9
LM4875MX/NOPB
-VIN
HP SENSE
DC VOL/SD#
VDD
VO1
VO2
BYPASS
GND
P1
Speaker
VR3
10k
Volume
R29
2k
R30
10
C66
100n
C67
47u
C64
47u
R28
200
C68
100n
J7
Phones
TITLE:
Multiband DC receiver
REV: 1.1
Company: VK7IAN
Sheet: 1/1
Date: 2021-10-17
Drawn By: ianm
EasyEDA