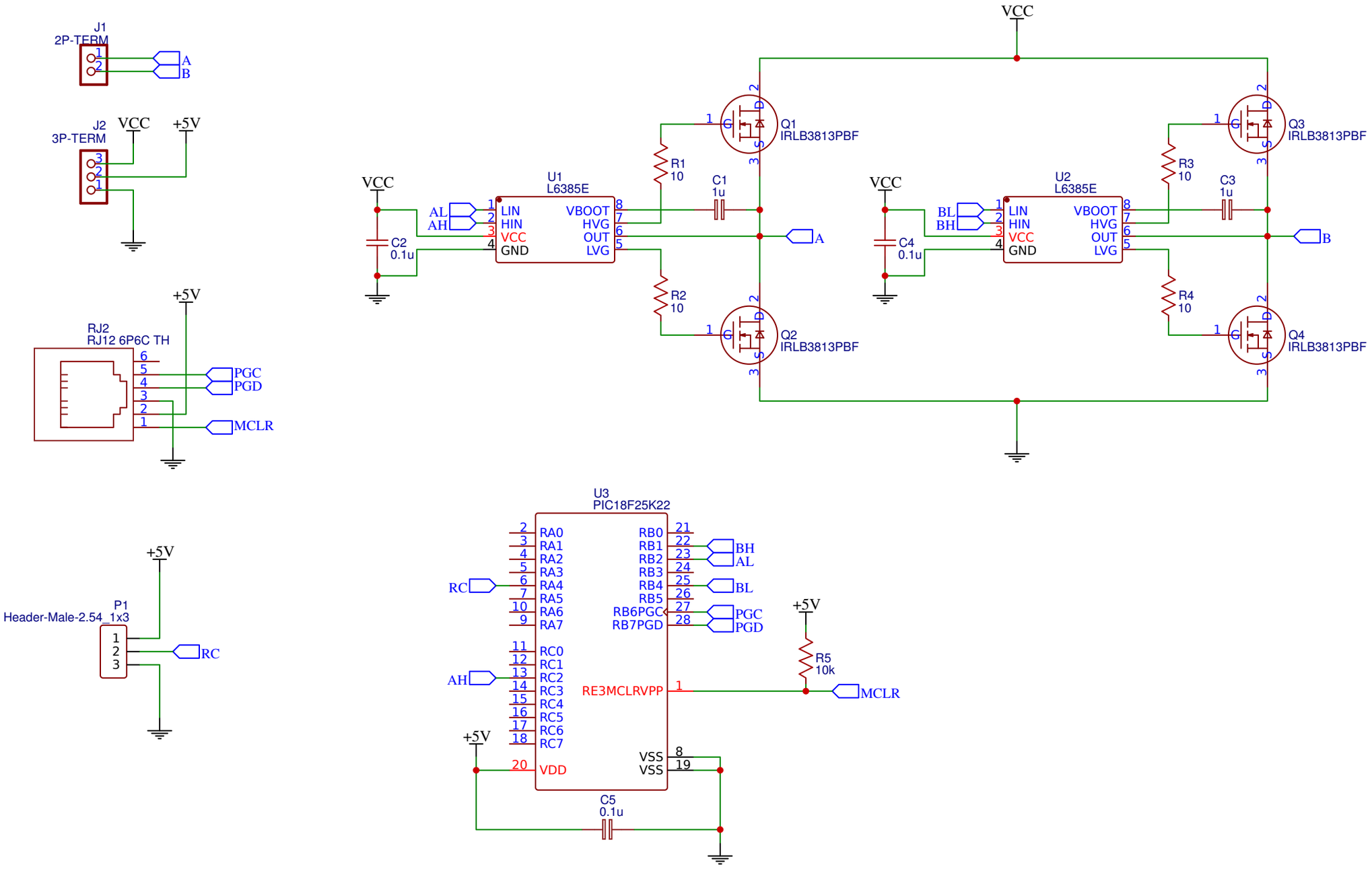

TITLE: C-Module		REV: 1.0
EasyEDA	Company: agl-developpement	Sheet: 1/1
	Date: 2019-02-18 Drawn By: jmgonet	