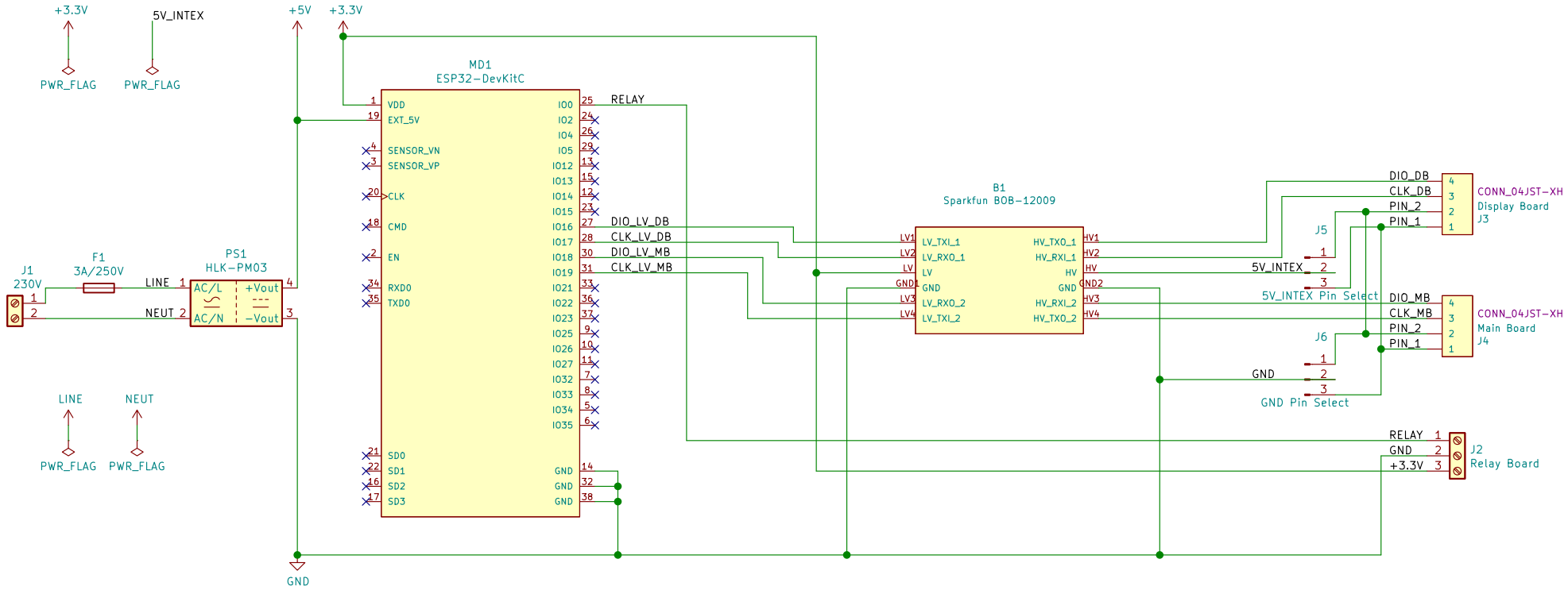

Sheet: /
File: intex-swg-pcb.sch

Title: Intex SWG with jumpers

Size: A4	Date: 2022-05-22	**Rev: 3.0**
KiCad E.D.A. kicad (5.1.10)-1		Id: 1/1