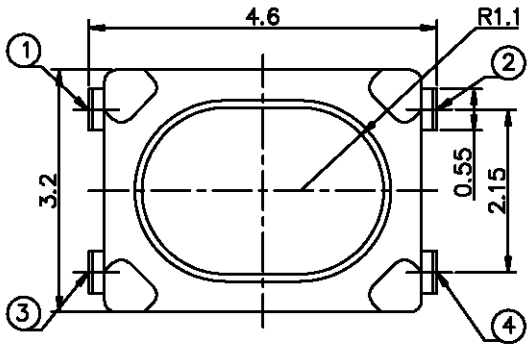

CIRCUIT DIAGRAM

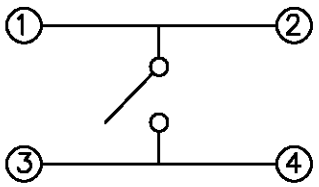

SMD REFLOW PATTERN (TORELANCE : ±0.05)

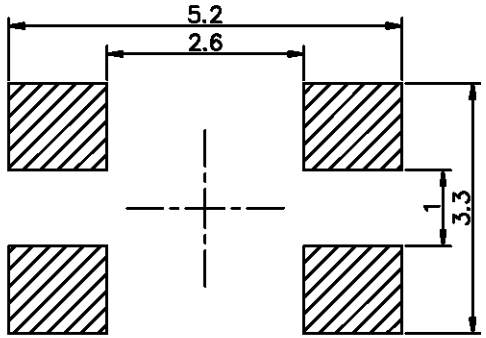

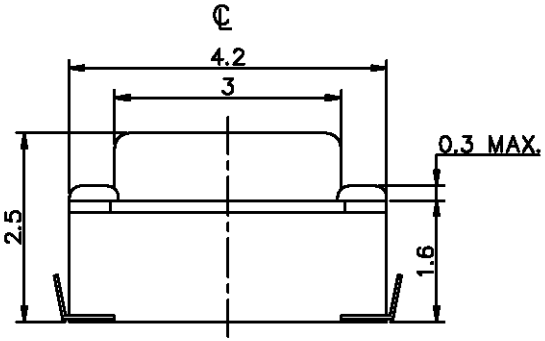

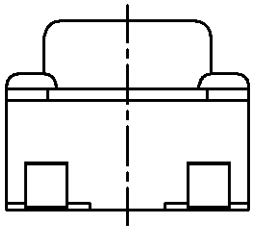

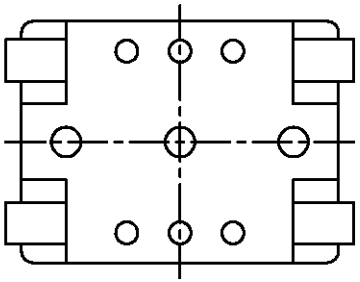

SPECIFICATION

1. RATING : DC 16V / 50mA
2. CONTACT RESISTANCE : MAX.500mOhm
3. TRAVEL : 0.2 mm ±0.1mm
4. OPERATING FORCE : 160gf / 220gf ±50gf / 400gf ±50gf
5. OPERATING LIFE
   - 160gf / 220gf : 100000 CYCLES MIN.
   - 400gf : 50000 CYCLES MIN.
6. NON SPECIFIED DIMENSIONS TOLERANCE : ±0.2

		GENERAL TORANCE (UNLESS SPECIFIED) ±0.2	SCALE 10/1	UNIT METRIC	TITLE	DHT-4325A
			THIRD ANGLE PROJECTION	SIZE A4	DOCUMENT NUMBER	D.O-T4325-AD-01A-A
		DRAWN BY	CHECKED BY	APPROVED BY	D.O ELECTRONICS	D.O ELECTRONICS CO.,LTD. www.dongao99.com
REV	DESCRIPTION	MACLEIN	D.KIM	JASON	THIS DRAWING CONTAINS INFORMATION THAT IS PROPRIET TO D.O ELECTRONICS CO.,LTD. AND SHOULD NOT BE USED WITHOUT WRITTEN PERMISSION.	