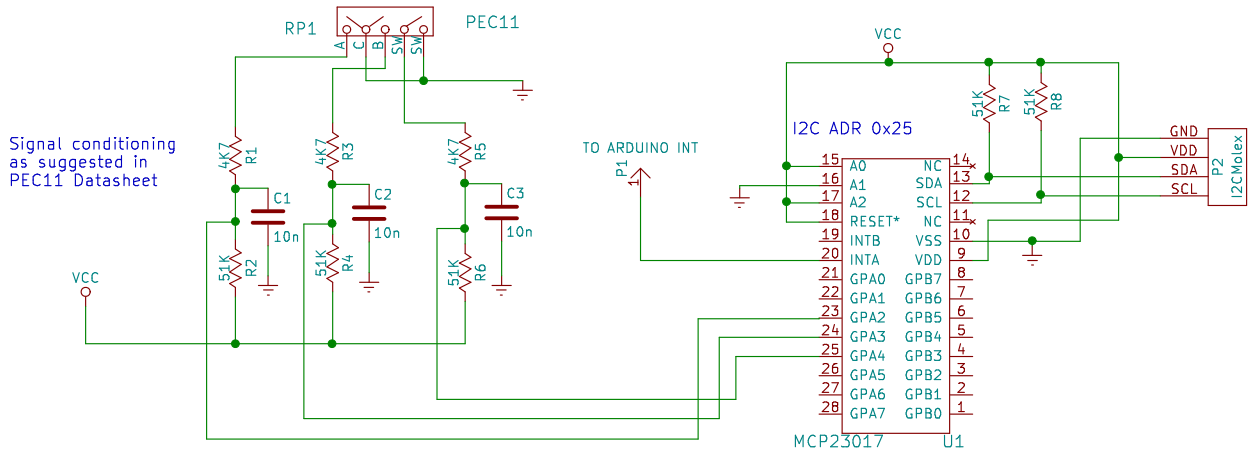

Example Expander connection(s)
incl. using interrupt output

G. D. (Joe) Young <jyoung@islandnet.com>

Sheet: /
File: rotaryenc.sch

Title: ROTARY ENCODER and DEBOUNCING

Size: USLetter	Date: 2020-07-06	Rev: 1
KiCad E.D.A. kicad 4.0.5+dfsg1-4		Id: 1/1