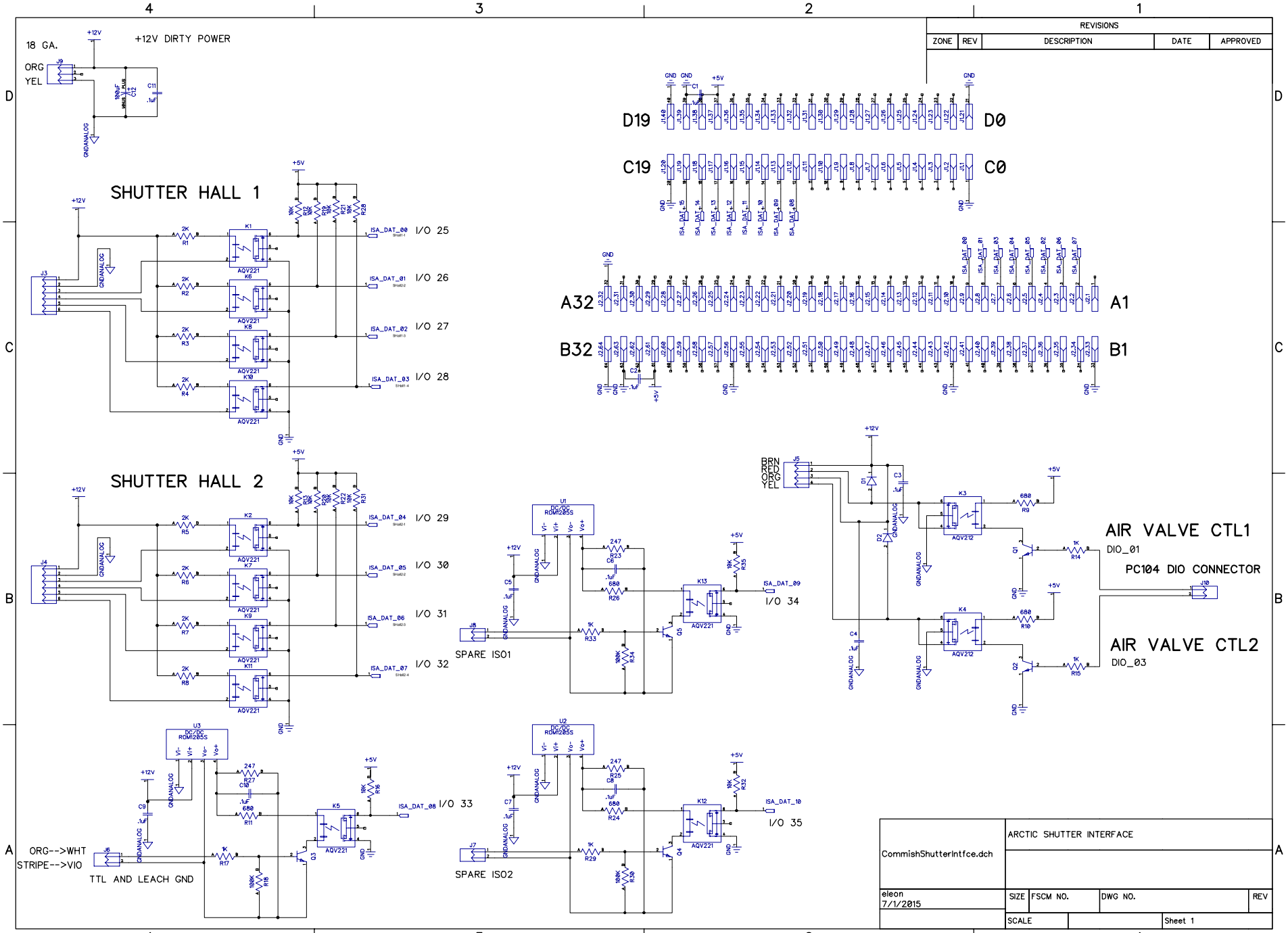
REVISIONS
ZONE
REV
DESCRIPTION
DATE
APPROVED
18 GA.
ORG
YEL
+12V DIRTY POWER
SHUTTER HALL 1
SHUTTER HALL 2
I/O 25
I/O 26
I/O 27
I/O 28
I/O 29
I/O 30
I/O 31
I/O 32
I/O 33
I/O 34
I/O 35
D19
D0
C19
C0
A32
A1
B32
B1
BRN
RED
ORG
YEL
AIR VALVE CTL1
DIO_01
PC104 DIO CONNECTOR
AIR VALVE CTL2
DIO_03
SPARE ISO1
SPARE ISO2
ORG-->WHT
STRIPE-->VIO
TTL AND LEACH GND
CommishShutterIntfce.dch
ARCTIC SHUTTER INTERFACE
eleon
7/1/2015
SIZE
FSCM NO.
DWG NO.
REV
SCALE
Sheet 1