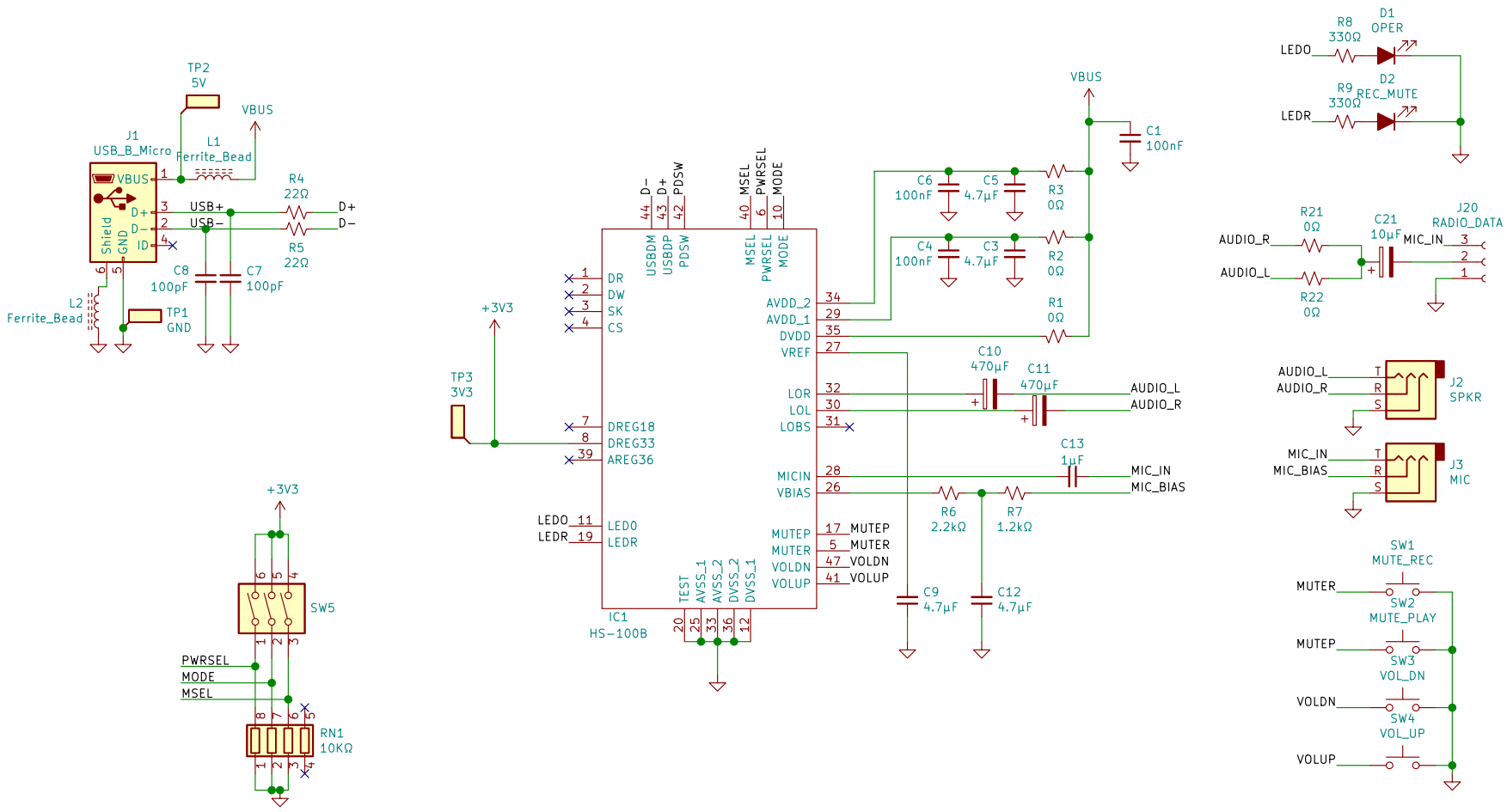

Licensed under Creative Commons CC−BY−4.0

Chris Keller

Sheet: /
File: hs100b−eval.sch

Title: HS100B Evaluation Board

Size: A4	Date: 2021−04−21	**Rev: 3**
KiCad E.D.A. kicad 5.1.9		Id: 1/1