PULSE MODULATION SYSTEMS

INTRODUCTION

In analog modulation systems, some parameter of sinusoidal carrier is varied in accordance with the instantaneous value of the modulating signal. In pulse modulation systems, the carrier is no longer a continuous signal but consists of a pulse train, some parameter of which is varied in accordance with the instantaneous value of the modulating signal. There are two types of pulse modulation systems:

(i) Pulse Amplitude Modulation (PAM)

(ii) Pulse Time Modulation (PTM)

In PAM, amplitude of the pulses of the carrier pulse train is varied in accordance with the modulating signal; whereas, in PTM, the timing of the pulses of the carrier pulse train is varied. There are two types of PTM.

(i) Pulse Width Modulation (PWM) or

Pulse Duration Modulation (PDM) or

Pulse Length Modulation (PLM)

(ii) Pulse Position Modulation (PPM)

In PWM, the width of pulses of the carrier pulse train is varied in accordance with the modulating signal; whereas, in PPM, the position of pulses of the carrier pulse train is varied.

According to the sampling theorem, if a modulating signal is bandlimited to BHz (i.e., there are no frequency components beyond BHz in the frequency spectrum of the modulating signal), the sampling frequency must be at least 2 BHz and, hence, the frequency of the carrier pulse train must also be at least 2 BHz.

The spectral range occupied by the basic signal is called the *baseband frequency range* or, simply, *baseband.* Hence the basic signal is sometimes called as *baseband signal.* When the basic signal is transmitted without a frequency translation, the system is known as *baseband system.*

7.1 PULSE AMPLITUDE MODULATION

Figure 7.1.1. explains the principle of PAM. A baseband signal $f(t)$ is shown in Fig. 7.1.1(a) and carrier pulse

train $f_c(t)$ is shown in Fig. 7.1.1(b). The frequency of the carrier pulse train is decided by the sampling theorem. A pulse amplitude modulated signal $f_m(t)$ is shown in Fig. 7.1.1(c). It can be seen that the amplitude of the pulses in Fig. 7.1.1(c) depends on the value of $f(t)$ during the time of the pulse.

In Fig. 7.1.1(a), the baseband signal $f(t)$ is shown to have only a positive polarity. In practice, however, we can have a baseband signal with a positive as well as negative polarity. But, in such a case, the modulated pulses will also be of positive as well as negative polarities. As the transmission of such bipolar pulses is inconvenient; a clamping circuit is used so that we always have a baseband signal with only the positive polarity as shown in Fig. 7.1.1(a).

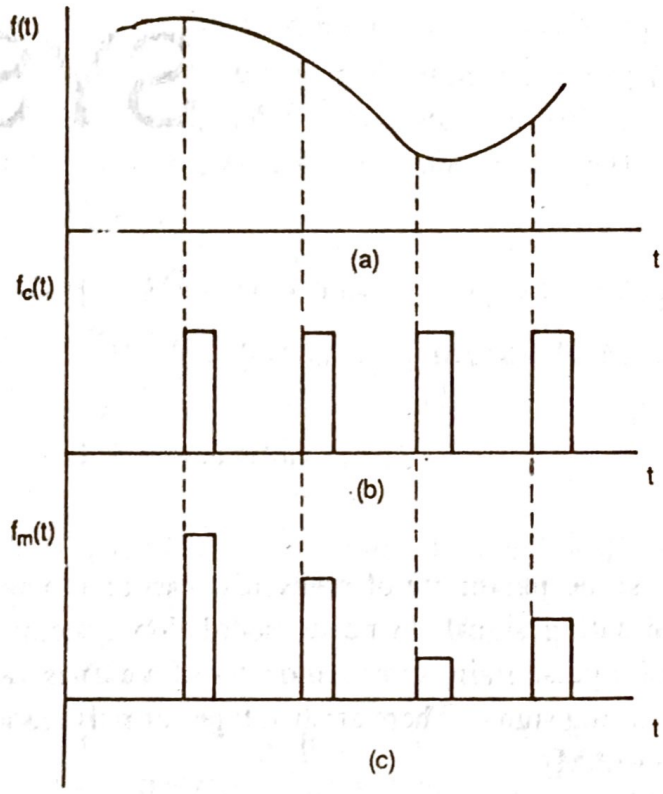

Fig. 7.1.1 (a) Pulse Amplitude Modulation-Baseband Signals $f(t)$ (b) Carrier Pulse train $f_c(t)$ (c) Pulse Amplitude Modulated Signal

There are two methods of getting the pulse amplitude modulated waveform :

(i) Natural sampling or shaped-to sampling,

(ii) Flat-top sampling.

(I) Natural Sampling

This is explained in Fig. 7.1.2. Here, the amplitude of the carrier pulse train is adjusted to 1, the duration of the pulses is τ, and they are separated by Ts. The PAM signal as shown in Fig. 7.1.2(d) is obtained by multiplying $f(t)$ of Fig. 7.1.2 (a) and $f_c(t)$ of Fig.7.1.2(b) in the multiplier of Fig. 7.1.2(c). It may be seen from Fig. 7.1.2(d) that the tops of the pulse-amplitude modulated pulses are not flat but they follow the natural waveform of the modulating signal $f(t)$ during the respective pulse intervals and, hence, the name *natural sampling* is given to this method.

The Fourier series of a periodic train of pulses can be given as

$$v(t) = \frac{A\tau}{T_o} + \frac{2A\tau}{T_o}\sum_{n=o}^{\infty} C_n \cos\frac{2\pi nt}{T_o} \tag{7.1.1}$$

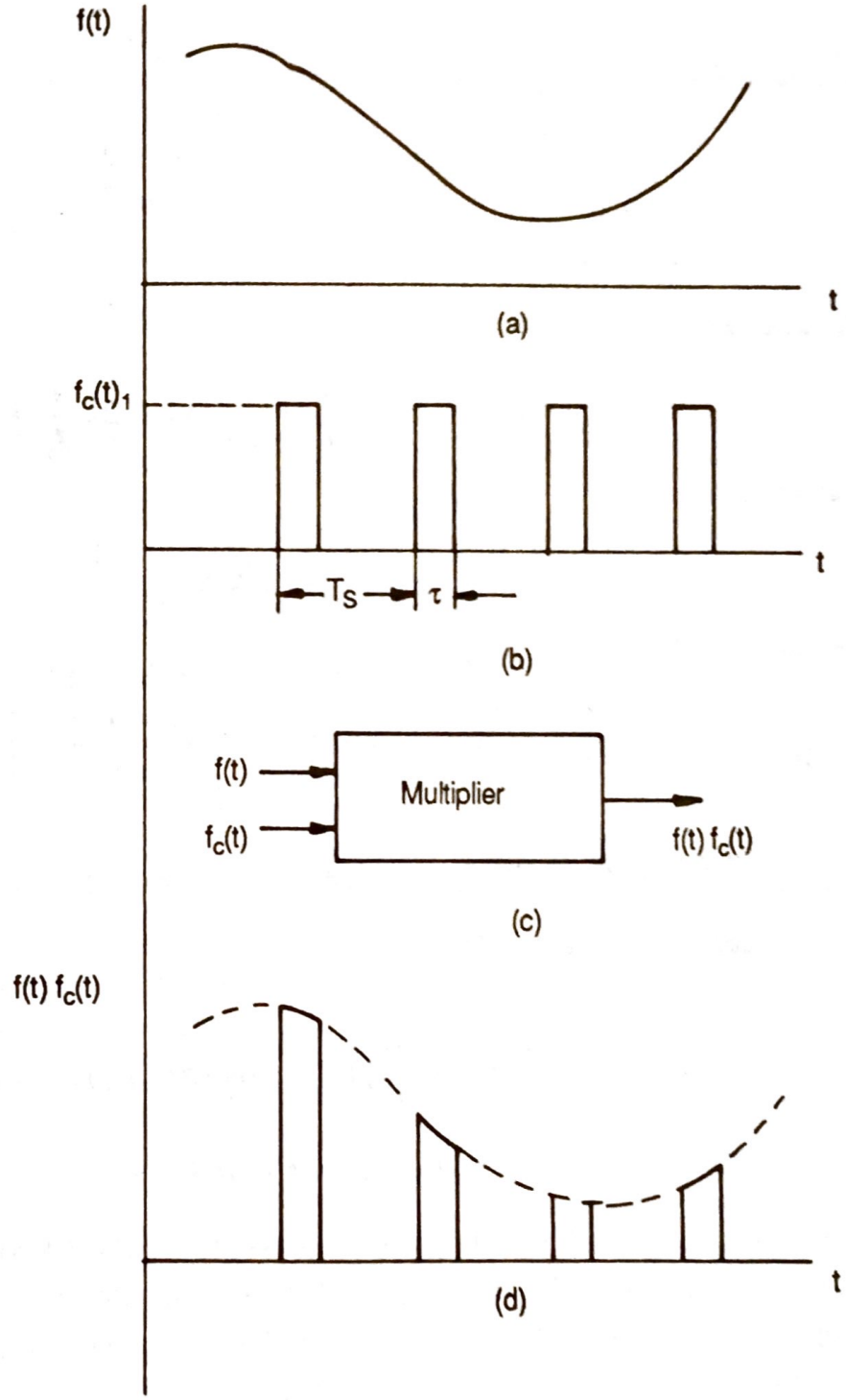

Fig. 7.1.2(a) Natural Samplig-Baseband Signal $f(t)$ (b) Carrier Pulse Train $fc(t)$ (c) Multiplier (d) PAM Signal at Output of Multiplier

where

A is the amplitude of the pulse

τ the duration of the pulse

T_o the period of the pulse train

and

C_n is given by

$$C_n = \frac{\sin(n\pi\tau/T_o)}{n\pi\tau/T_o}$$

For the carrier pulse train of Fig. 7.1.2(b), we have

$$v(t) = f_c(t)$$

$$A = 1$$

and

$$T_o = T_s$$

Therefore Eq. (7.1.1) becomes

$$f_c(t) = \frac{\tau}{T_s} + \frac{2\tau}{T_s}\left[C_1 \cos 2\pi \frac{t}{T_s} + C_2 \cos 2 \times 2\pi \frac{t}{T_s} + \cdots\right] \tag{7.1.2}$$

The constant C_n is given by

$$C_n = \frac{\sin(2\pi\tau/T_s)}{2\pi\tau/T_s} \qquad n = 1, 2, 3, \ldots$$

The output of the multiplier is then

$$f(t)\,f_c(t) = \frac{\tau}{T_s} f(t) + \frac{2\tau}{T_s}\left[f(t)C_1 \cos 2\pi \frac{t}{T_s} + f(t)\,C_2 \cos 2 \times 2\pi \frac{t}{T_s} + \cdots\right]$$

Let us choose $T_s = \dfrac{1}{2f_M}$ (by sampling theorem)

where f_M = maximum frequency component in $f(t)$
We then get

$$f(t)\,f_c(t) = \frac{\tau}{T_s} f(t) + \frac{2\tau}{T_s}[f(t)C_1 \cos 2\pi(2f_M)t$$

$$+ f(t)\,C_2 \cos 2\pi(4f_M)t + \cdots] \tag{7.1.3}$$

If we don't consider the multiplying factor, then the first term on the r.h.s. of Eq. 7.1.3 is the baseband signal $f(t)$ itself. The second term is a product of $f(t)$ and a sinusoid of frequency $2f_M$. Now, $f(t)$ is bandlimited to f_M. Hence, the multiplication in the second term will yield the frequency spectrum given by the sum and difference frequency terms. Thus the frequency spectrum of the second term is from $(2f_M - f_M)$ to $(2f_M + f_M)$ i.e., from f_M to $3f_M$. Similarly, the frequency spectrum of the third term is from $(4f_M - f_M)$ to $(4f_M + f_M)$; i.e., from $3f_M$ to $5f_M$ and so on. The magnitude plots of the spectral densities of $f(t)$ and $f_c(t)$ are shown in Figs 7.1.3(a) and 7.1.3(b), respectively. If the sampled signal is passed through an ideal low pass filter with a cut off frequency f_M, then the output will be the baseband signal $f(t)$.

(ii) Flat-top Sampling

The electronic circuitry needed to perform natural sampling is somewhat complicated because the pulse-top shape is to be maintained. These complications are reduced by flat-top sampling, shown in Fig. 7.1.4e. In this, the tops of the pulses are flat. Thus the pulses have a constant amplitude within the pulse interval. The

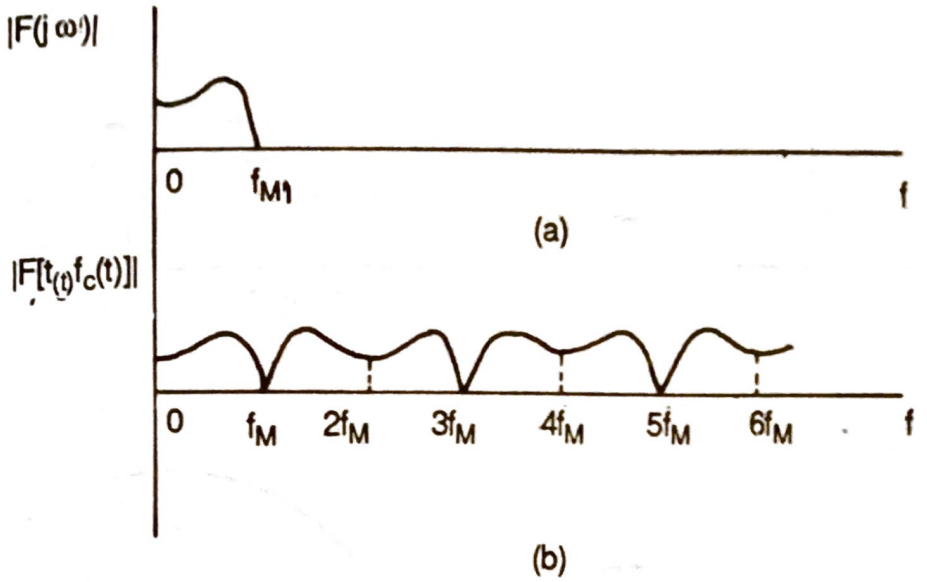

Fig. 7.1.3(a) Magnitude plot of Spectral Density of $f(t)$
(b) Magnitude plot of Spectral Density of $f(t)$ and $f_c t$

constant amplitude of the pulse can be chosen at any value of $f(t)$ within the pulse interval. In Fig. 7.1.4(e), the value at the beginning of the pulse is chosen. By making the value of the pulse amplitude constant within the pulse interval, some distortion is introduced as there is a deviation from the actual value of $f(t)$ during the pulse interval. This is discussed below:

Spectrum of a Flat-top Sampled Signal

The flat-top sampled signal $f_m(t)$ of Fig. 7.1.4(e) may be considered as a convolution of the impulse sampled signal $f_s(t)$ of Fig. 7.1.4(a), and non-periodic pulse $p(t)$ of width τ and height 1 of Fig. 7.1.4(c). The spectrums of $f_s(t)$ and $p(t)$ are shown in Fig. 7.1.4(b) and Fig. 7.1.4(d), respectively. The spectrum of $f_m(t)$ is shown in Fig. 7.1.4(f), which is obtained by multiplying $F_{s(\omega)}$ with $P_{(\omega)}$. As the $P_{(\omega)}$ value is different at different frequencies, the shape of $F_M(\omega)$ is not similar to $F_{s(\omega)}$ which shows that a distortion will be introduced if the signal is recovered by an ideal low pass filter of a cut-off frequency ω_M.

A PAM Modulator Circuit

A PAM modulator circuit is shown in Fig. 7.1.5. This circuit is a simple emeitter follower. In the absence of the clock signal, the output follows the input. The modulating signal is applied as the input signal. Another input to the base of the transistor is the clock signal. The frequency of the clock signal is made equal to the desired carrier pulse train frequency. The amplitude of the clock signal is so chosen that the high level is at ground ($O\ V$), and the low level is at some negative voltage which is sufficient to bring the transistor in the cut-off region. Thus when the clock signal is high, the circuit behaves as an emitter follower, and the output follows the input modulating signal. When the clock signal is low, the transistor is cut-off and the output is zero. Thus the output waveform, shown in Fig. 7.1.5 is the desired pulse amplitude modulated signal.

7.1.1 Demodulation of PAM Signals

Demodulation of natural sampled signal can be done with the help of an ideal low pass filter with a cut-off frequency ω_M. But, for this, the pulse-top shape is to be maintained after transmission. This is very difficult

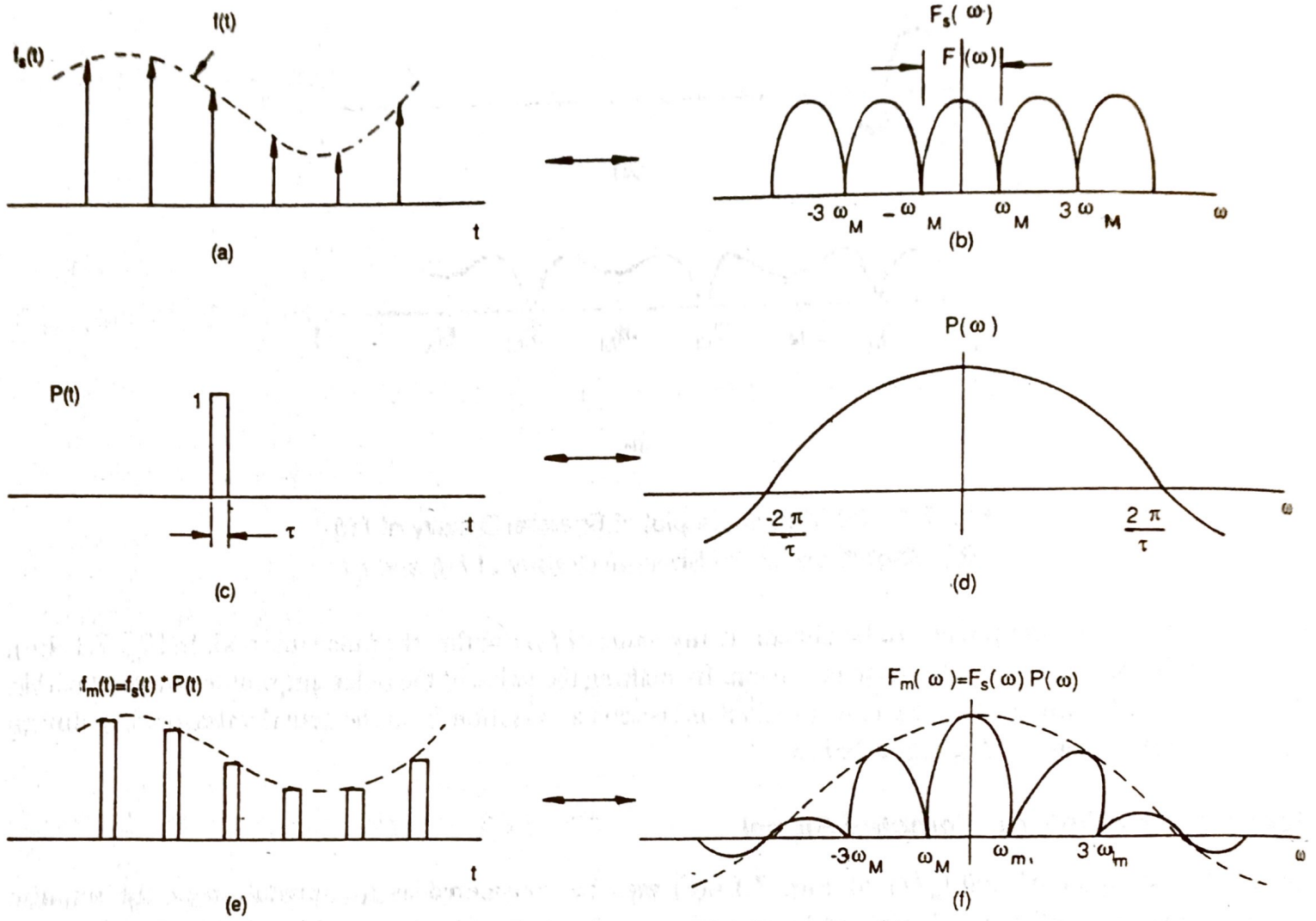

Fig.7.1.4 Flat Top Sampling (a) Impulse Sampled Signal $f_s(t)$ (b) Spectrum of $f_s(t)$ (c) Non-periodic pulse $p_c t$ of Width τ and Height *1* (d) Spectrum of $p(t)$ (e) Flat-top Sampled PAM signal $f_m(t)$ (f) Spectrum of $f_m(t)$

due to the transmitter and receiver noise. Therefore, normally, flat-top sampling is preferred over natural sampling.

There are two demodulation methods for the flat-top sampled signal:

(i) Using an Equalizer

If the flat-top sampled signal is passed through an ideal low pass filter, the spectrum of the output will be $F(\omega)P(\omega)$. The time function of the output is somewhat distorted due to the multiplying factor $P_{(\omega)}$. If the low pass filter output is passed through a filter having a transfer function $1/P_{(\omega)}$ over the range $0-\omega_M$, the spectrum at the output of this filter will be $F(\omega)P(\omega).\frac{1}{P(\omega)} = F(\omega)$, and, hence, the original time function $f(t)$ will be recovered. The filter with a transfer function $\frac{1}{P(\omega)}$ is known as equalizer. The overall arrangement is shown in Fig. 7.1.1.1(a).

The combination of an ideal LPF and equalizer is known as composite filter. The transfer function $H(\omega)$ of this composite filter is shown in Fig. 7.1.1.1(b). (It may be noted that the transfer function of the equalizer outside ω_M can be chosen according to the convenience of design). $H(\omega)$ is given by

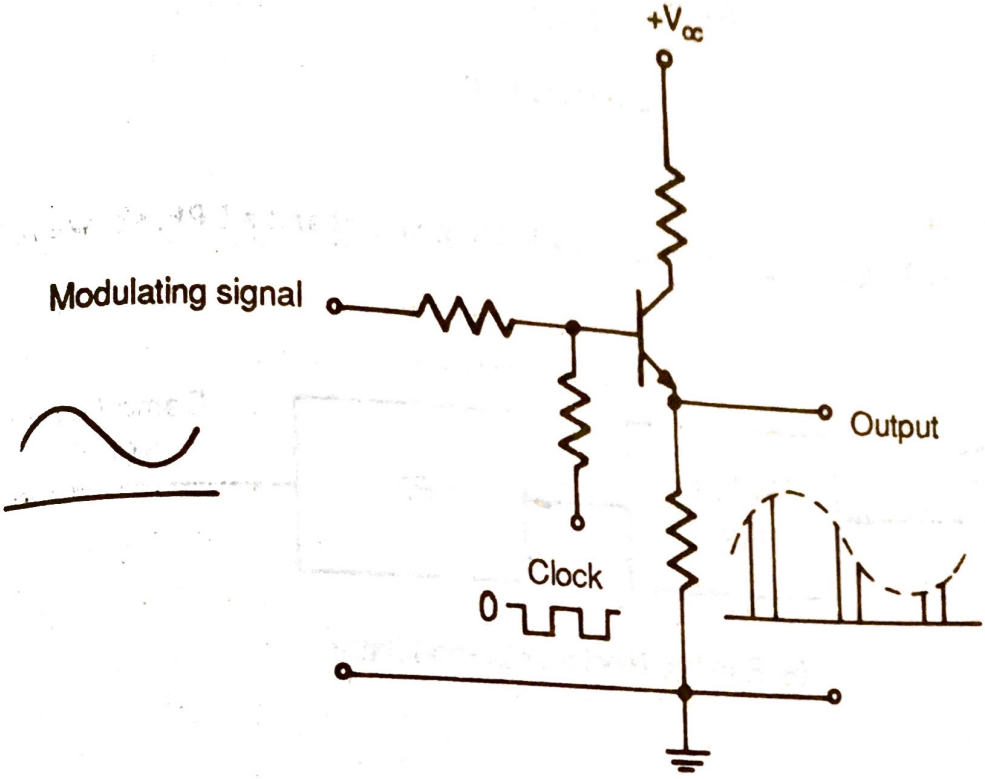

Fig.7.1.5 A PAM Modulator

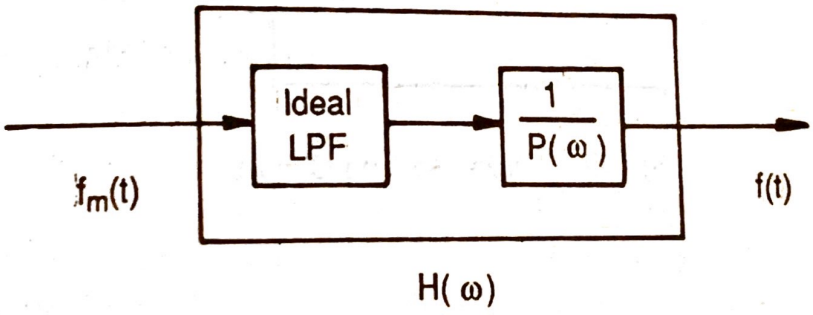

(a)

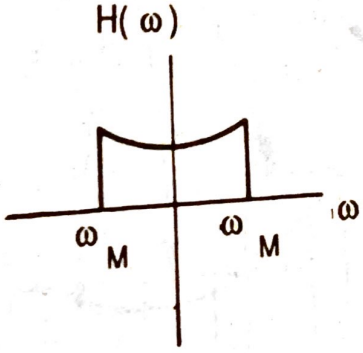

(b)

Fig. 7.1.1.1.Demodulation of Flat-Top Sampled PAM Signal Using Equalizer (a) Composite Filter with Transfer Function $H(\omega)$ (b) The Desired Characteristic of $H(\omega)$

$$H(\omega) = \frac{1}{P(\omega)}, \quad |\omega| < \omega_M$$

$$= 0 \text{ otherwise}$$

(ii) Using Holding Circuit

In this method, the received signal is passed through a holding circuit and a LPF, shown in Fig. 7.1.1.2(a).

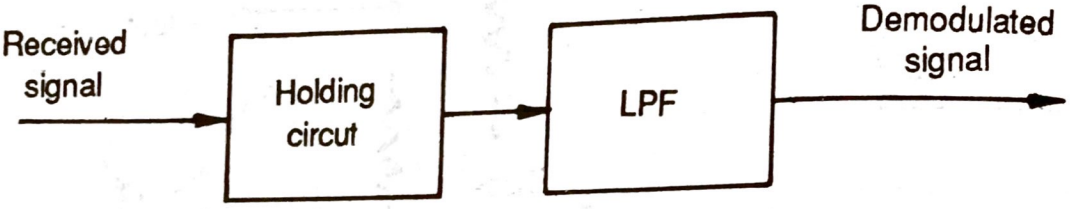

(a) Building Blocks of Demodulator

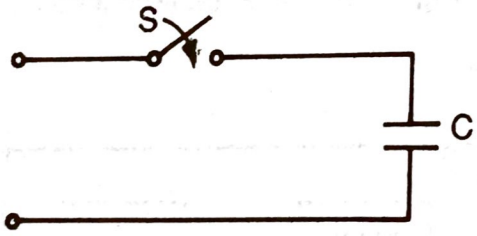

(b) Zero Order Holding Circuit

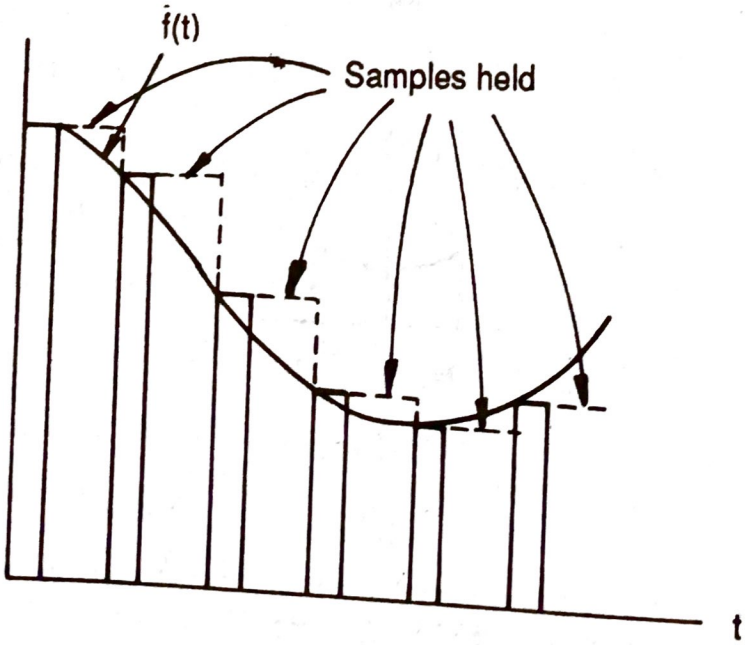

(c) Output of Holding Circuit

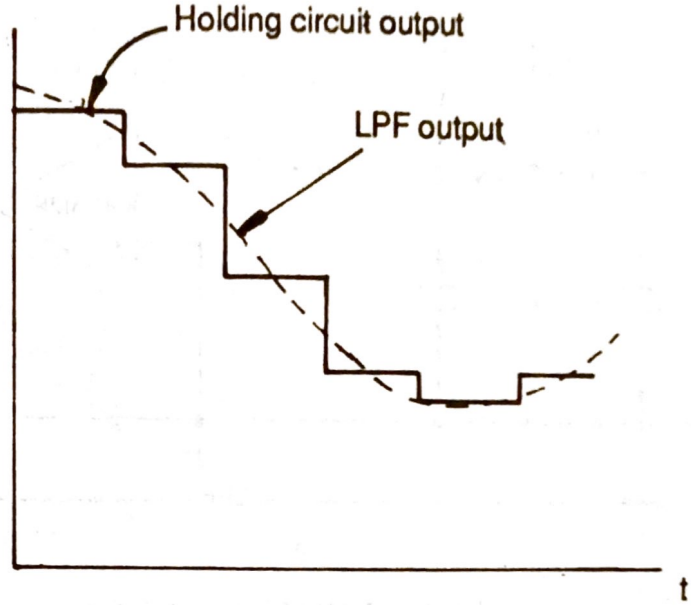

(d) Output of LPF

Fig.7.1.1.2 Demodulation of Flat-Top Sampled PAM Signal

Figure 7.1.1.2(b) shows a simple holding circuit. The switch S closes after the arrival of the pulse, and it opens at the end of the pulse. The capacitor C gets charged to the pulse amplitude value, and it holds this value during the interval between the two pulses. Thus the sampled values are held as shown in Fig. 7.1.1.2(c). The holding circuit output is smoothened in LPF as shown in Fig. 7.1.1.2(d). It can be seen that some distortion is introduced because of the holding circuit. The circuit of Fig. 7.1.1.2(b) is known as *zero order* holding circuit, which considers only the previous sample to decide the value between the two pulses. The first order holding circuit considers the previous two samples; the second order holding circuit considers the previous three samples; and so on. As the order of the holding circuit increases, the distortion decreases at the cost of the circuit complexity. The amount of permissible distortion decides the order of the holding circuit.

A PAM Demodulator Circuit

A PAM demodulator circuit is shown in Fig. 7.1.1.3. It is just an envelope detector followed by a low pass filter. The diode and R-C combination work as the envelope detector. This is followed by a second order OP-AMP low pass filter to have a good filtering characteristic. Thus, for the received pulse amplitude modulated signal as the input signal, the desired demodulated signal shown in Fig. 7.1.1.3 is the output.

7.1.2 Time Division Multiplexed PAM System

Normally, in a PAM system, the duration of the pulse (τ) is much less than the time period of pulses T_s i.e., $\tau << T_s$, as shown in Fig. 7.1.2.1(a). Thus, no information is being transmitted through the system for most of the time. The time space $T_s - \tau$ can be utilized to transmit information from other signals. In Fig. 7.1.2.1(b), the signal numbers 2, 3, and 4 are transmitting information with the help of samples numbered 2, 3, and 4, respectively. This is along with the samples numbered 1 of the signal number 1. The time period T_s is equally

divided between the four signals, thus allocating a time slot of $\frac{T_s}{4}$ to each signal. The duration of time slot is such that $\frac{T_s}{4} > \tau$. Thus there is a guard time $\frac{T_s}{4} - \tau$ between all successive sampling pulses, ensuring that there is less cross-talk between signals. (More about cross-talk in Sec. 7.1.3 and 7.1.4) The arrangement by

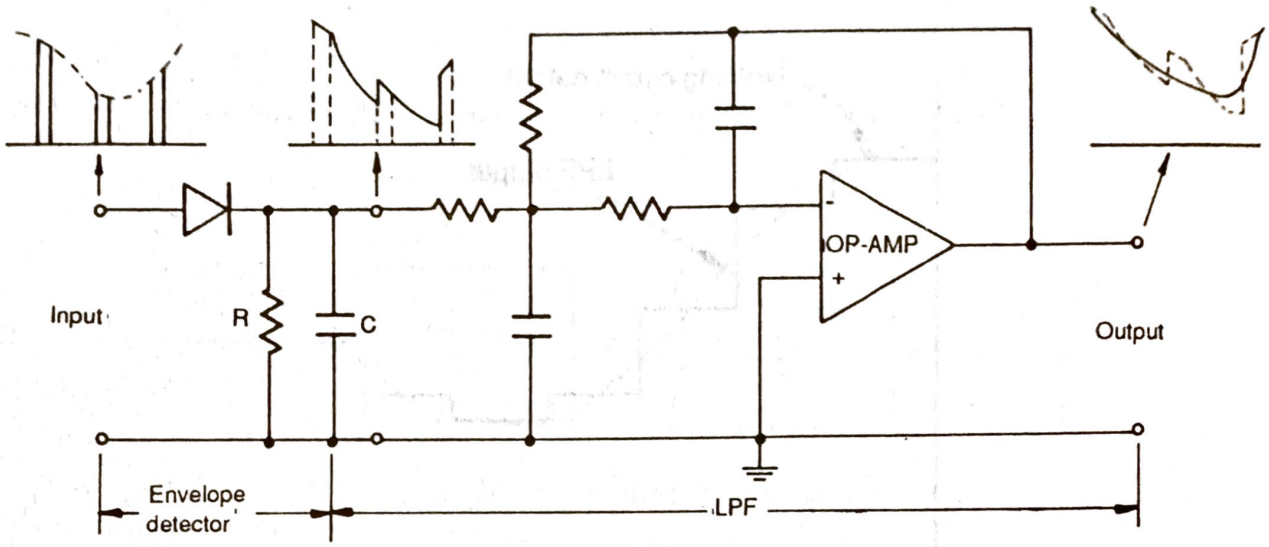

(a)

Fig. 7.1.1.3 A PAM Demodulator

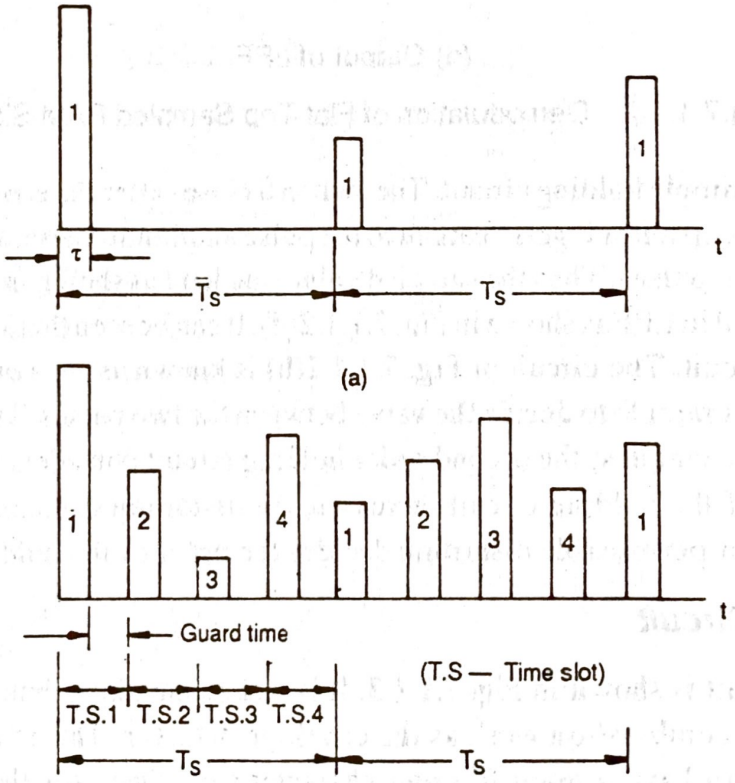

(b)

Fig. 7.1.2.1 (a) (b)

which the information from more than one signal is transmitted in this manner is known as Time Division Multiplexing (TDM). A Time Division Multiplexed PAM System is shown in Fig. 7.1.2.2 which transmits information from n signals. The switch 1 and switch 2, respectively known as commutator and decommutator, are synchronized electronic switches which rotate at the same speed of $2f_M$ rotations per second. The commutator samples and combines the samples, while the decommutator separates the samples belonging to individual signals.

7.1.6 Bandwidth of PAM Signals

Let us assume that we have to transmit n signals, each bandlimited to f_M Hz. Then, for each signal, we have to take $2f_M$ samples per seecond. Thus, in all, we have to transmit $2nf_M$ samples per second.

Now, according to the sampling theorem, a continuous signal band limited to B Hz can be transmitted by 2B samples per second. Conversely, it can be stated that 2B samples per second define a continuous signal band limited to B Hz. Therefore, the bandwidth of the PAM system of n signals, each band limited to f_M Hz, will be nf_M Hz, because we are transmitting $2nf_M$ samples per second.

7.1.7 S/N Ratio of PAM System

The noise performance of PAM is identical to AM-SC signal. The figure of merit ν is unity. It has already been shown that the bandwidth of PAM/AM is nf_M, where, n is the number of messages multiplexed. Therefore, the bandwidth per message is f_M. Thus, the transmission of sampled signal message reproduces a bandwidth at the receiver that is equivalent to the message $f(t)$. In other words, the transmission of a sampled signal is equivalent to the direct transmission of $f(t)$. The signal and noise power at the transmitter and receiver is expected to be identical. It has been shown in chapter 2 that the power of a sampled signal and the baseband signal $f(t)$ is the same. (refer Prob. 2.2)

Hence,

$$S_o = S_i = \overline{f^2(t)}$$

The bandwidth of sampled signal per message is same as that of the baseband signal $f(t)$.

Hence, for white noise

$$N_o = N_i = \eta f_M$$

where f_M is the bandwidth of $f(t)$, and $\eta/2$ is the noise power per unit bandwidth. The figure of merit is given by

$$(\nu)_{PAM} = \frac{(S_o/N_o)}{(S_i/N_i)} = 1$$

7.2 PULSE TIME MODULATION

The two types of PTM systems, namely PWM and PPM, are shown in Fig. 7.2.1. The Fig. 7.2.1(a) is the baseband signal $f(t)$ whereas the Fig. 7.2.1(b) is the carrier pulse train $f_c(t)$. The Fig. 7.2.1(c) is the PWM signal where the width of each pulse depends on the instantaneous value of the baseband signal at the sampling instant. The Fig. 7.2.1(d) is the PPM signal where the shift in the position of each pulse depends on the instantaneous value of the baseband signal at the sampling instant. It can be seen that in PWM, the information about the baseband signal lies in the trailing edge of the pulse, whereas, in PPM, it lies in both the edges of the pulse. (Although, basically it lies in the leading edge, but since the width of the pulse is same always, the trailing edge also carries the same information.)

7.2.1 Generation of PTM Signals

Indirect Method: The scheme of generation of the PTM signals is shown in Fig. 7.2.1.1. Firstly, the flat-topped PAM signals are generated as explained in Sec.7.1 [Fig. 7.2.1.1(a)]. The synchronized ramp waveform shown in Fig. 7.2.1.1(b) is generated during each pulse interval. These two signals are added as shown in Fig. 7.2.1.1(c), and the sum is applied to a comparator circuit whose reference level is shown by a broken line in Fig. 7.2.1.1(c).

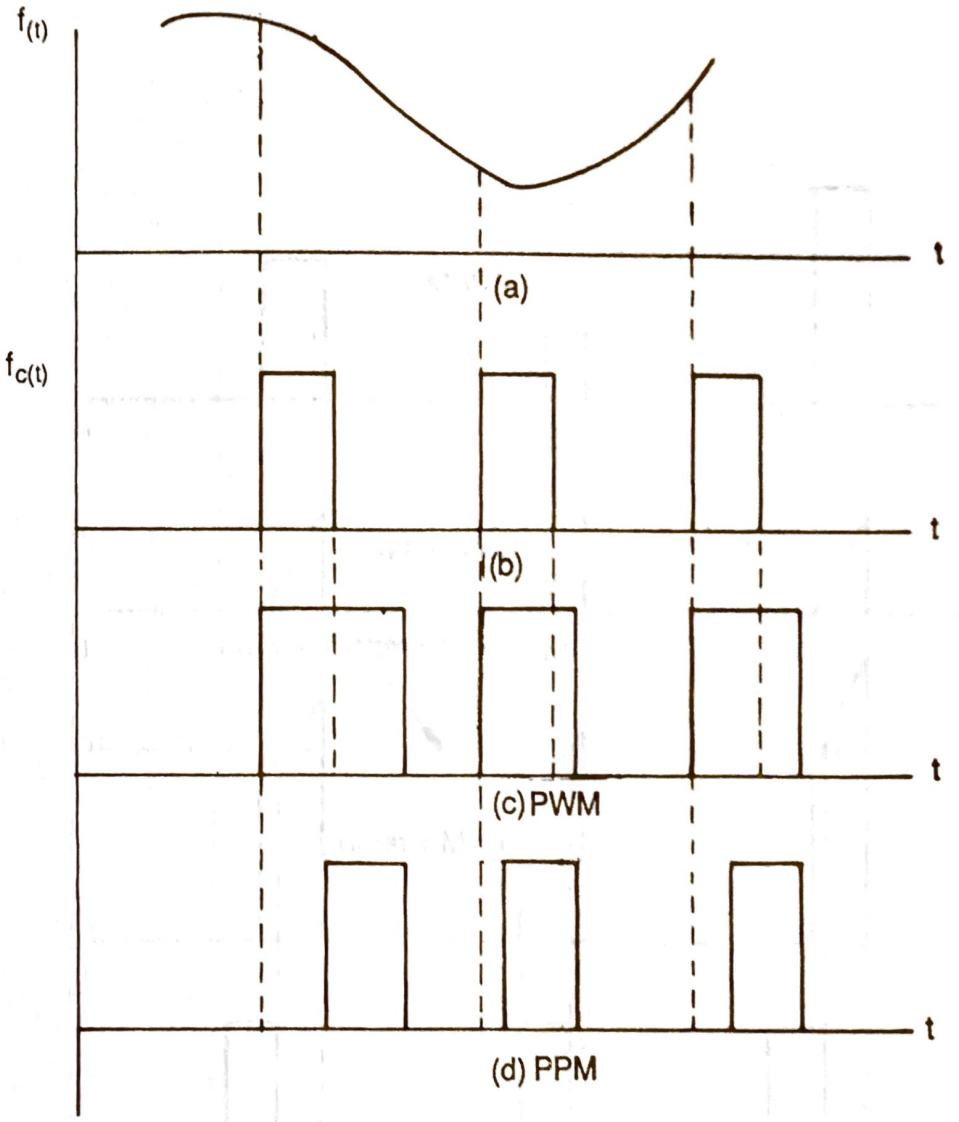

Fig.7.2.1 Pulse Time Modulation (a) Baseband Signal $f(t)$, (b) Carrier Pulse Train $f_c(t)$, (c) Pulse Width Modulated Signal, (d) Pulse Position Modulated Signal .

The second crossing of the comparator reference level by the waveform of Fig. 7.2.1.1(c) is used to generate the pulses of constant amplitude and width as shown in Fig. 7.2.1.1(d), giving the desired PPM waveform. The leading edge of the synchronized ramp of Fig. 7.2.1.1(b) is used to start a pulse, and the trailing edge of the PPM waveform of Fig. 7.2.1.1(d) is used to terminate the pulse, as shown in Fig. 7.2.1.1(e), giving the desired PWM waveform.

The ramp amplitude is so adjusted that it is slightly greater that the maximum variation in amplitude of the PAM signals. The comparator reference level is such that it always intersects the sloping portion of the waveform of Fig. 7.2.1.1(c).

Direct Method: In the direct method, the PTM waveforms are generated without generating the PAM waveform. Here, the baseband signal $f(t)$ of Fig. 7.2.1.2(a) and a ramp signal of Fig. 7.2.1.1(b), occurring at the sampling instants, are added to give the waveform of Fig. 7.2.1.2(c). This is compared in a comparator whose reference level is shown in Fig. 7.2.1.2(c) by a broken line.

The PPM (Fig. 7.2.1.2d) and PWM (Fig.7.2.1.2e) waveforms are then obtained in the same manner as explained in the indirect method of generation of PTM signals.

If we want to modulate the leading edge of pulses in the PWM waveform, the ramp waveform shown in Fig. 7.2.1.3(a) should be used. For modulating both the edges of the pulses in the PWM waveform, the ramp waveform shown in Fig. 7.2.1.3(b) needs to be used.

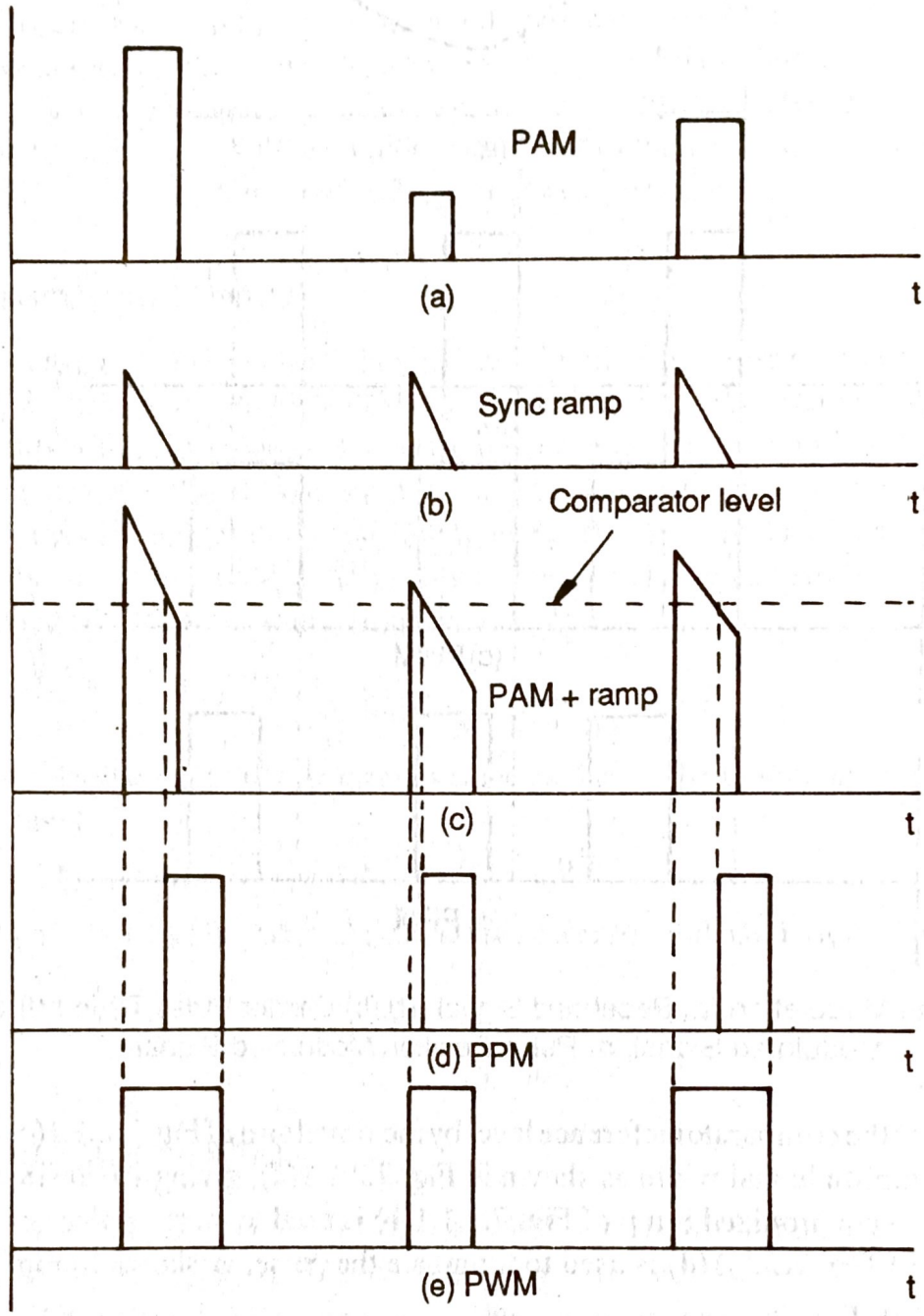

Fig.7.2.1.1 Indirect Method of Generation of PTM Signals (a) PAM Signal, (b) Synchronized Ramp, (c) PAM + Synchronized Ramp, (d) PPM Signal, (e) PWM Signal

A PWM Modulator Circuit: A PWM modulator circuit is shown in Fig. 7.2.1.4. The clock signal of the desired frequency is applied as shown, from which the negative trigger pulses are derived with the help of a diode and an $R_1 - C_1$ combination which works as a differentiator. These negative trigger pulses are applied to the pin no.2 of the 555 timer which is working in the monostable mode. They decide the starting time of the PWM pulses. The end of the pulses depends on an $R_2 - C_2$ combination, and on the signal at pin no.5, to which the modulating signal is applied. Therefore, the width of the pulses depends upon the value of the modulating signal, and thus the output at pin no.3 is the desired pulse width modulated signal.

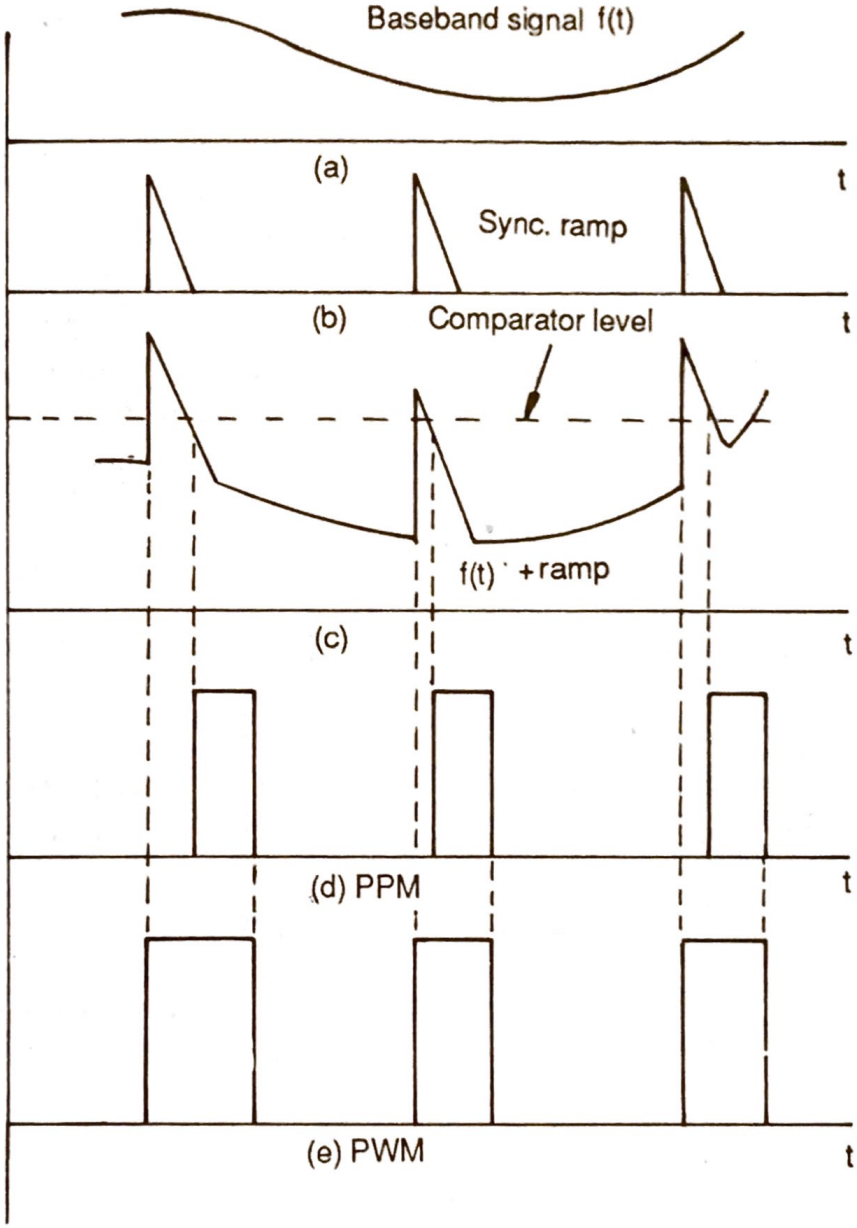

Fig. 7.2.1.2 Direct Method of Generation of PTM Signals (a) Baseband Signal $f(t)$ (b) Synchronized Ramp (c) $f(t)$ + Synchronized Ramp, (d) PPM Signal (e) PWM Signal

A PPM Modulator Circuit: A PPM modulator circuit is shown in Fig. 7.2.1.5. The PWM signal (which is obtained as shown in Fig. 7.2.1.4) is applied to pin no.2 through the diode and R_1-C_1 combination. Thus, the input to pin no.2 is the negative trigger pulses which correspond to the trailing edges of the PWM waveform. The 555 timer is working in a monostable mode and the width of the pulse is constant (governed by an R_2-C_2 combination).

The negative trigger pulses decide the starting time of the output pulses and, thus, the output at pin no.3 is the desired pulse position modulated signal.

7.2.2 Demodulation of PTM Signals

The PWM waveform of Fig. 7.2.2.1(a) is used to generate a ramp waveform as shown in Fig. 7.2.2.1(b). The

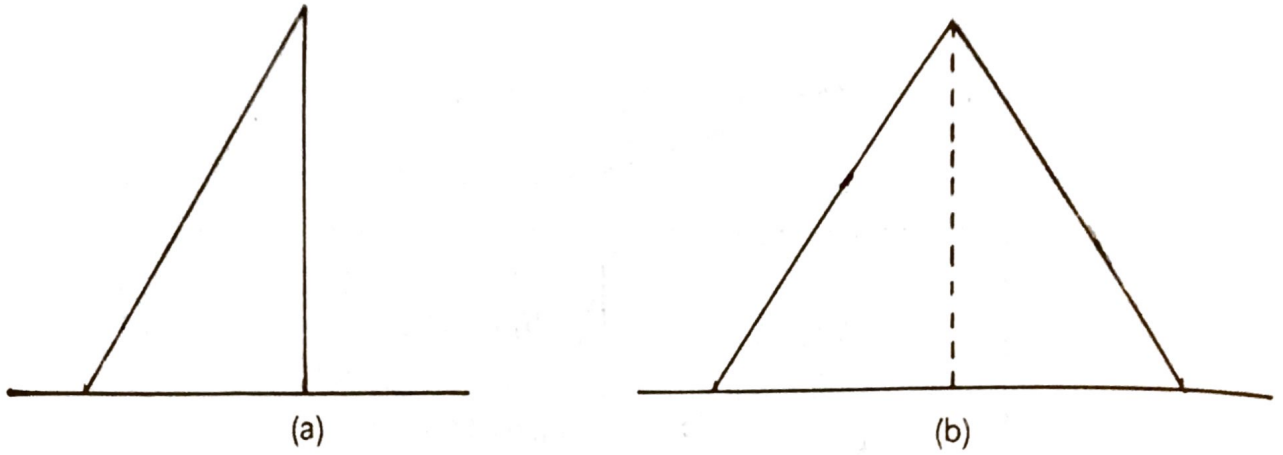

Fig.7.2.1.3(a) Synchronized Ramp for Leading Edge Modulation of PAM Signal
(b) Synchronized Ramp for Both Edge Modulation of PWM Signal

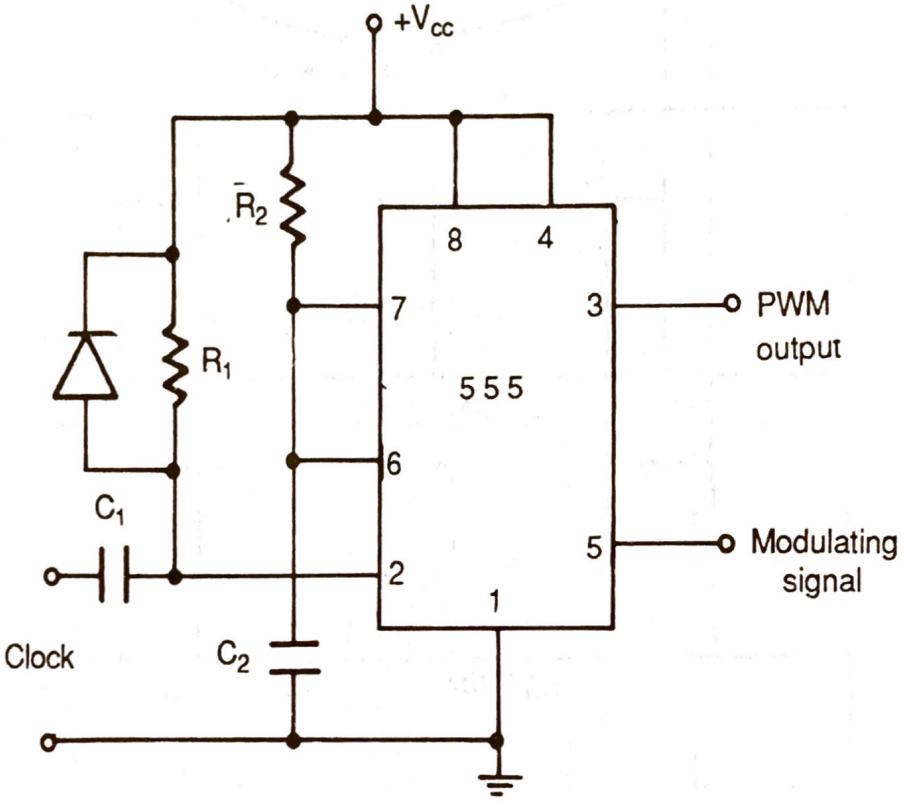

Fig.7.2.1.4 A PWM Modulator

leading edges of the PWM pulses start the ramp of same slope, and the trailing edges of the PWM pulses terminate the ramp. The height attained by the ramp is, therefore, proportional to the width of the PWM pulses. The height attained by the ramp is sustained for some time, thus creating a porch, after which the voltage returns to its initial level.

A similar type of synchronized ramp is shown in Fig. 7.2.2.2(b). This is generated with the help of the PPM pulses shown in Fig.7.2.2.2(a). Here, the ramp is initiated at the beginning of the time slot, and it is terminated by the leading edge of the PPM pulse. Thus, the height attained by the ramp is proportional to the displacement of the leading edge of the PPM pulses from the beginning of the time slot. Here too, the height attained by the ramp is sustained for some time, thus creating a porch, and then it is returned to the initial level.

The remaining procedure for both PWM and PPM is same. A sequence of locally generated pulses of a fixed amplitude are added to the synchronized ramp on the porch as shown in Figs 7.2.2.1(c) and 7.2.2.2(c). The

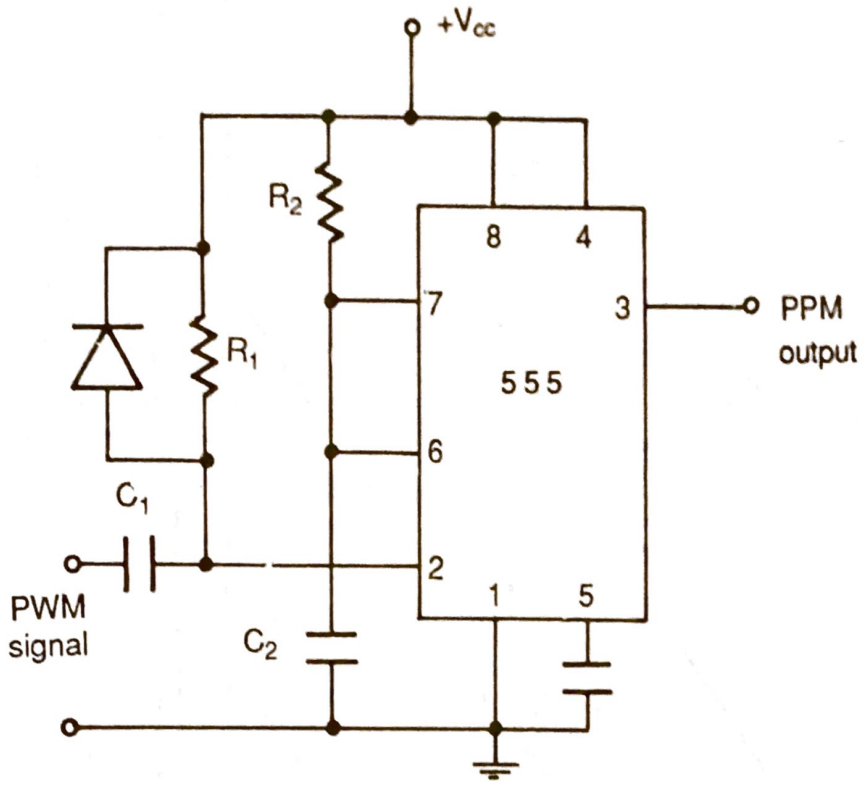

Fig.7.2.1.5 A PPM Modulator

lower portions in these two waveforms are clipped by a clipping circuit, with the clipping level adjusted in such a way that it never crosses the ramp. The output of the clipper is a PAM waveform (Fig.7.2.2.1d and Fig. 7.2.2.d), from which the baseband signal can be recovered as explained in Sec. 7.1.1.

A PWM Demodulator Circuit: A PWM Demodulator circuit is shown in Fig. 7.2.2.3. The transistor $T1$ works as an inverter. Hence, during the time interval $A-B$,when the PWM signal is high, the input to the transistor $T2$ is low. Therefore, during this time interval, the transistor $T2$ is cut-off and the capacitor C gets charged through an $R-C$ combination. During the time interval $B-C$, when the PWM signal is low, the input to the transistor $T2$ is high, and it gets saturated. The capacitor C then discharges very rapidly through $T2$. The collector voltage of $T2$ during the interval $B-C$ is then low. Thus the waveform at the collector of $T2$ is more or less a saw-tooth waveform whose envelope is the modulating signal. When this is passed through a second-order OP-AMP low pass filter, we get the desired demodulated output.

A PPM Demodulator Circuit: A PPM demodulator circuit is shown in Fig.7.2.2.4. This utilizes the fact that the gaps between the pulses of a PPM signal contain the information regarding the modulating signal. During the gap $A-B$ between the pulses, the transmitter is cut-off, and the capacitor C gets charged through the R-C combination. During the pulse duration $B-C$, the capacitor discharges through the transistor, and the collector voltage becomes low. Thus, the waveform at the collector is approximately a saw-tooth waveform whose envelope is the modulating signal. When this is passed through a second order OP-AMP low pass filter, we get the desired demodulated output.

7.2.3 Bandwidth of PTM Signals

The bandwidth can be estimated by observing the spectrum of the PTM signals. The spectral analysis for such waves is complicated and hence will not be treated in this text. We will discuss only the qualitative features of the spectrum. The one-sided spectrum of a PWM signal is shown in Fig. 7.2.3.1. Assume that the modulating signal is a single-tone sinusoid of the frequency ω_m, and the sampling frequency is ω_s. The PWM spectrum has the following frequency components

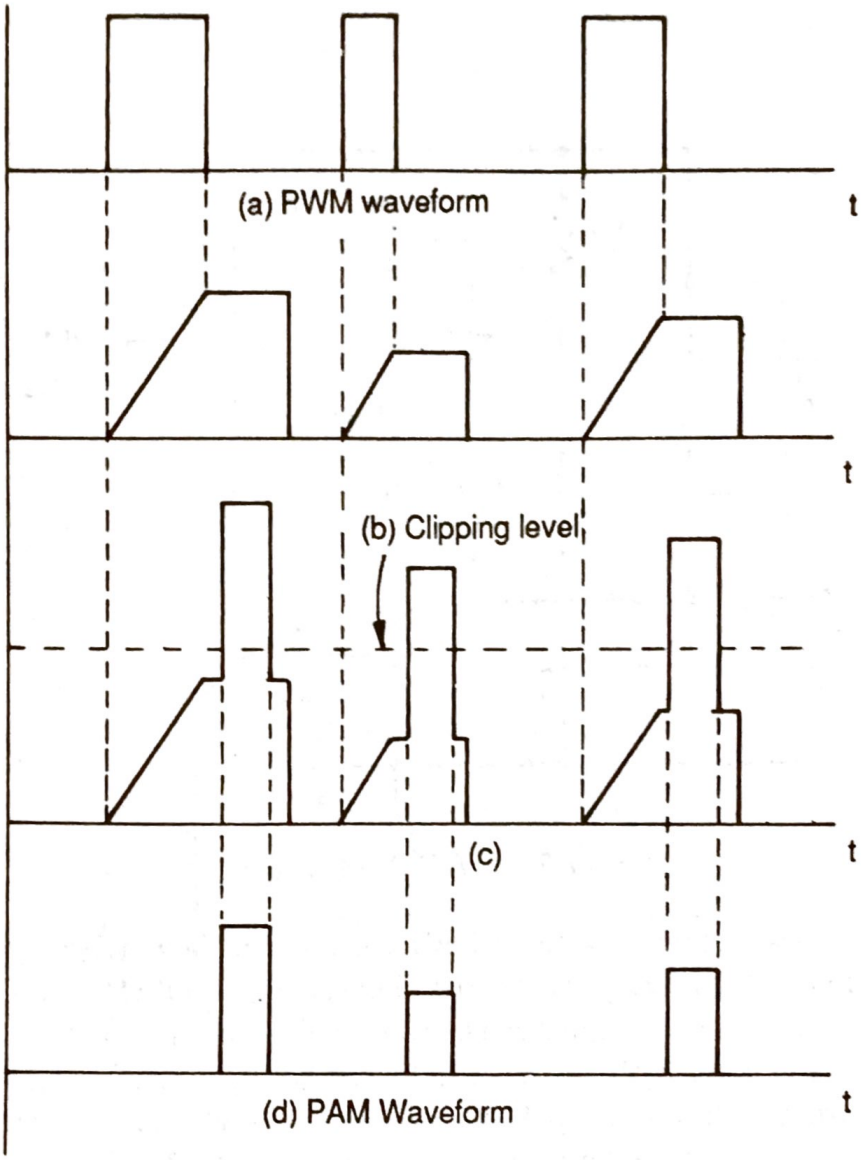

Fig.7.2.2.1 Demodulation of PWM Signals (a) PWM Waveform
(b) Ramp Waveform with Porch; (c) Ramp Waveform with locally Generated Pulse on Porch;
(d) PAM Waveform

(i) A dc component at $\omega = 0$, which represents the average value of the pulses.

(ii) The modulating frequency ω_m.

(iii) The harmonics of the sampling frequency ω_s.

(iv) Sidebands spaced by ω_m centered around each harmonic of ω_s.

The presence of harmonics of ω_s are due to the contribution of the unmodulated pulse train which may be taken as the carrier of the PDM wave. Each harmonic of ω_s is associated with the sidebands of an FM type. The sidebands of each ω_s extend to infinity outward, but with a decaying magnitude. However, the useful message band is available in a band 0-ω_m and hence a low pass filter can be used to recover the message from PWM. But the output of LPF is distored due to the presence of cross-modulation terms that lie in the baseband. The lower sidebands of ω_s may extend to lie in the message baseband to cause distortion. This can be prevented by restricting the maximum excursion of the trailing edge of the PWM pulse.

The spectrum of a naturally sampled PPM wave for a single tone modulating signal has a form similar to that of a PDM wave, with the only difference that it contains a component proportional to the derivative of the modulating signal in place of modulating component itself. Therefore, the PPM detection can be achieved

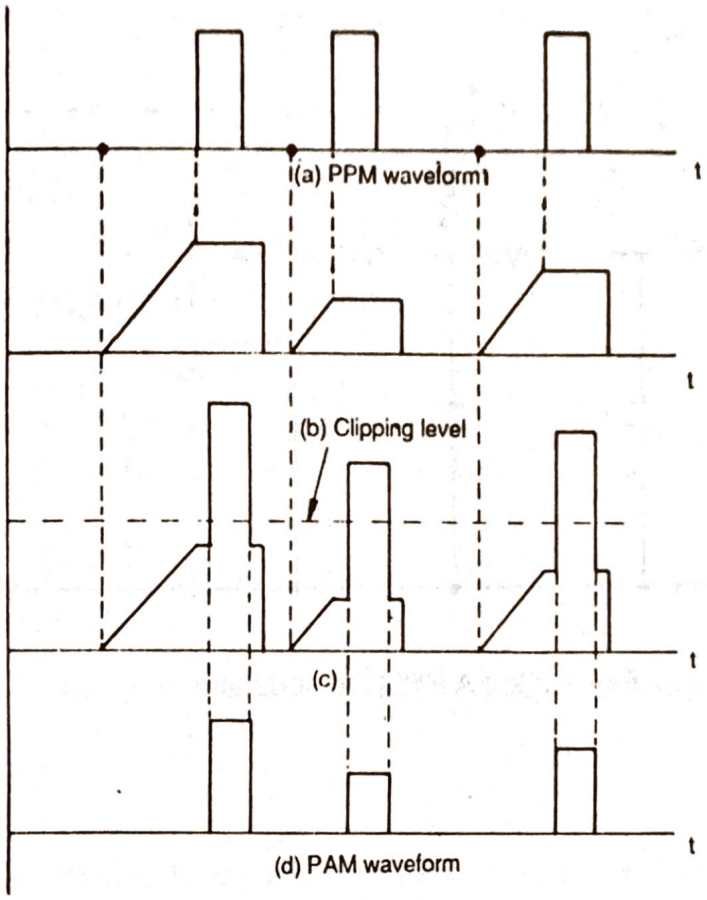

Fig.7.2.2.2 Demodulation of PPM Signals (a) PPM Wave-form;
(b) Ramp Wave-form with Porch(c) Ramp wave-form with Locally Generated Pulse on Porch
(d) PAM Wave-form

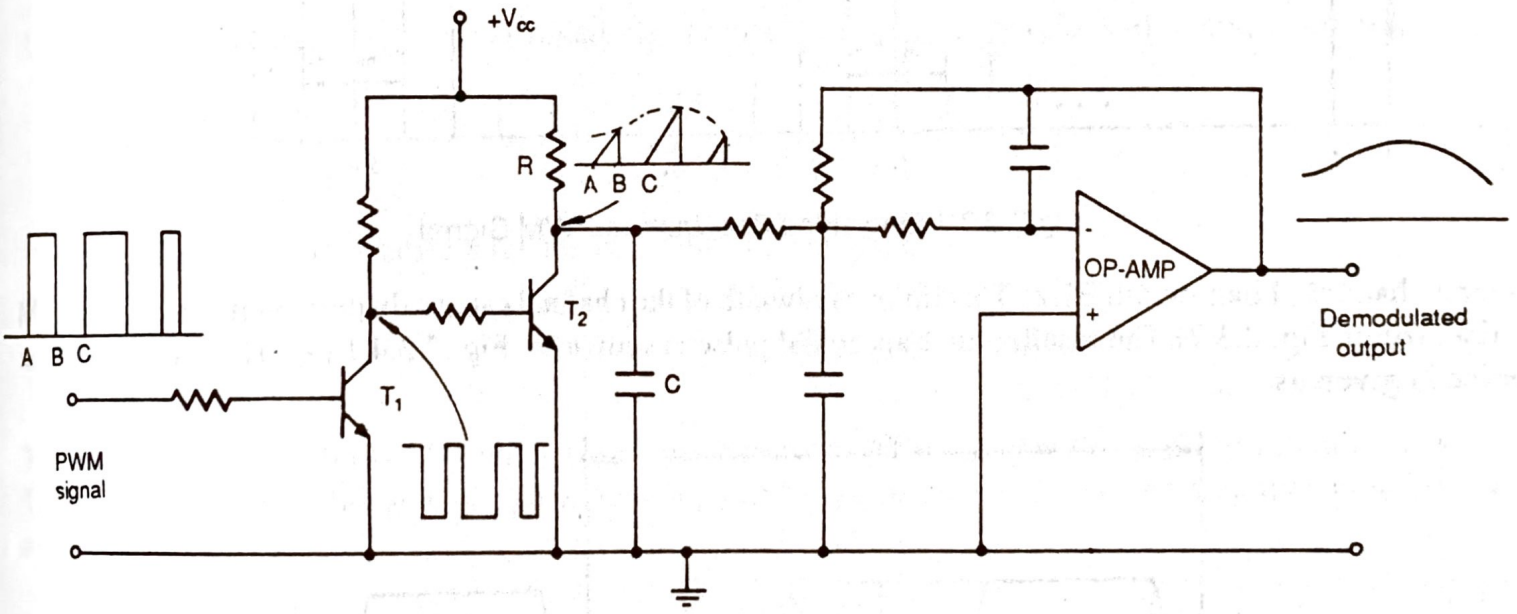

Fig. 7.2.2.3 A PWM Demodulator

by an LPF followed by an integrator. An alternative detection method is to convert PPM into PWM, and then pass it through an LPF. This provides greater signal amplitude with less distortion in the receiver.

7.2.4 *S/N Ratio of PTM Systems*

In PPM signal, the sample values of the modulating signal $f(t)$ are transmitted in terms of the pulse position

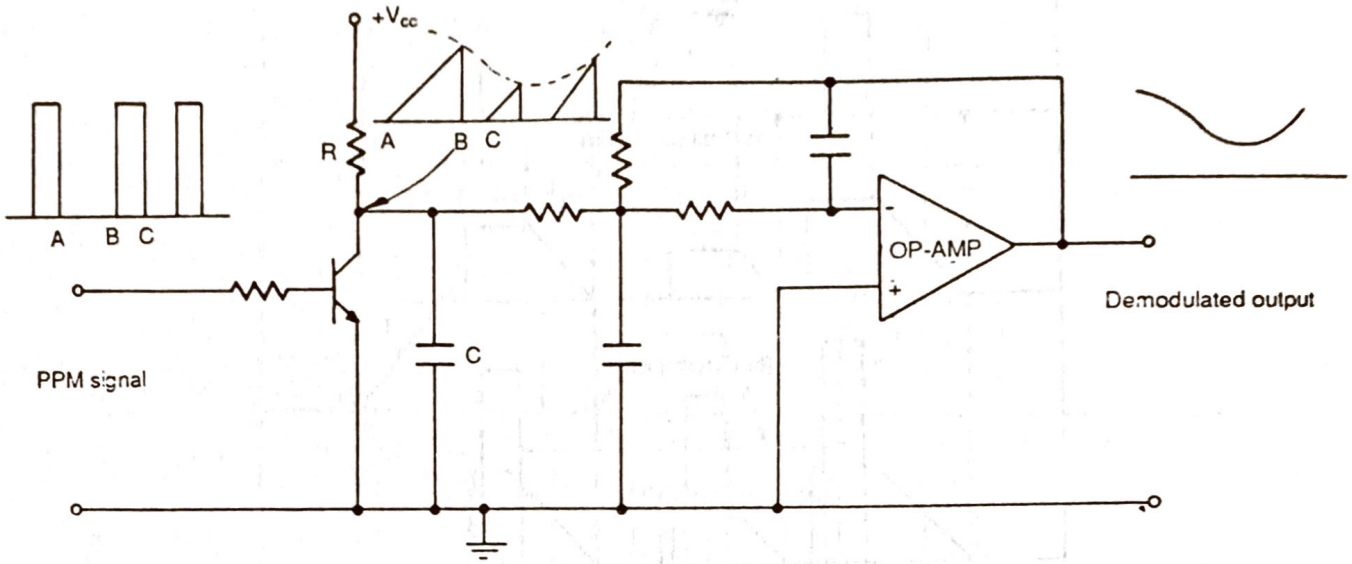

Fig. 7.2.2.4 A PPM Demodulator

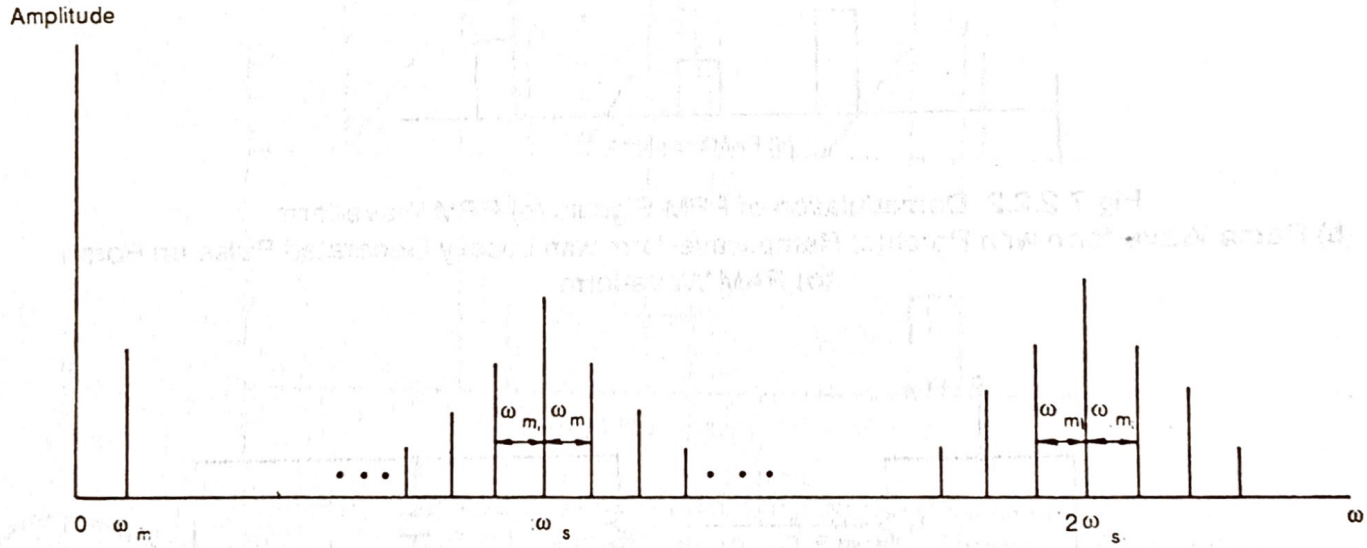

Fig.7.2.3.1 One-sided Spectrum of PWM Signal

over a channel of bandwidth BHz . This finite bandwidth of the channel causes dispersion in a received PPM pulse, (refer Fig. 2.3.7).The resultining trapezoidal pulse is shown in Fig. 7.2.4.1 (a). The rise time of the pulse is given as

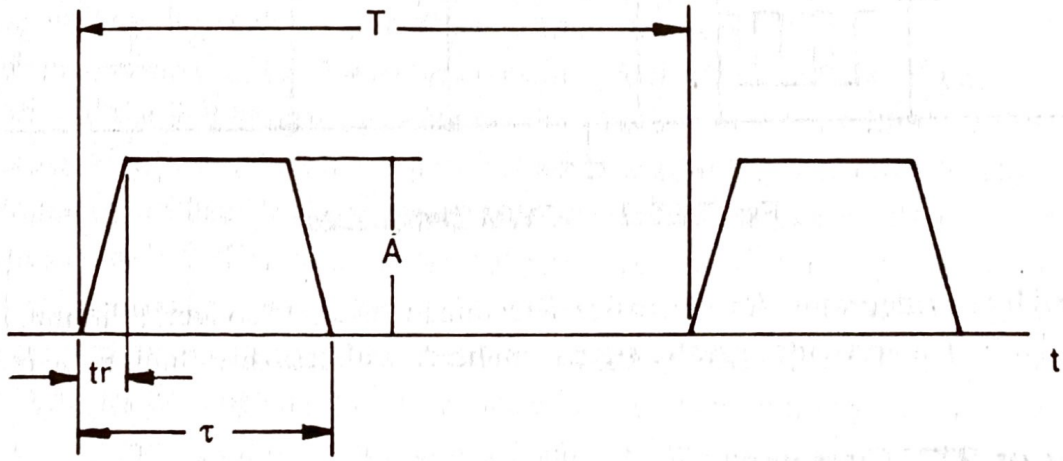

Fig.7.2.4.1(a) Trapezoidal Pulses due to Dispersion