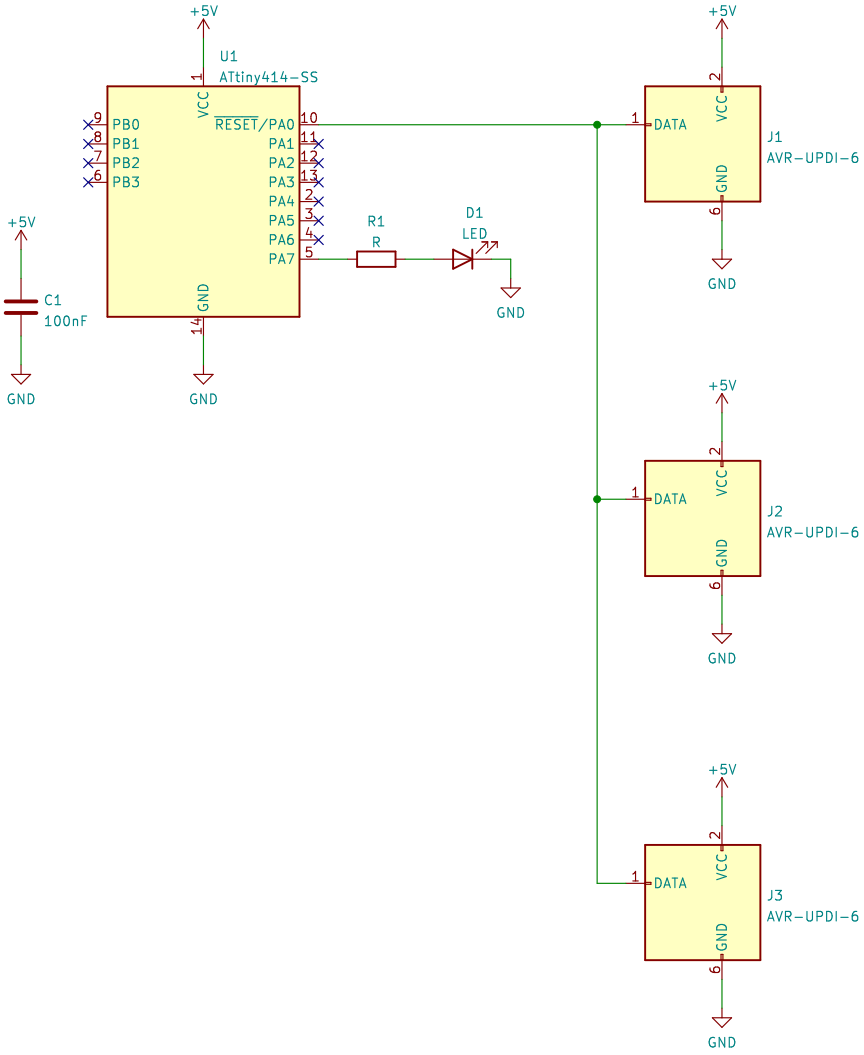


https://github.com/kiu/eAVR

**Nakamura Labs**

Sheet: /

File: eAVR6-UPDI-example.kicad_sch

**Title: eAVR6-UPDI Example**

| Size: A5 | Date: | **Rev:** |
|---|---|---|
| KiCad E.D.A. kicad (6.0.0) | | Id: 1/1 |