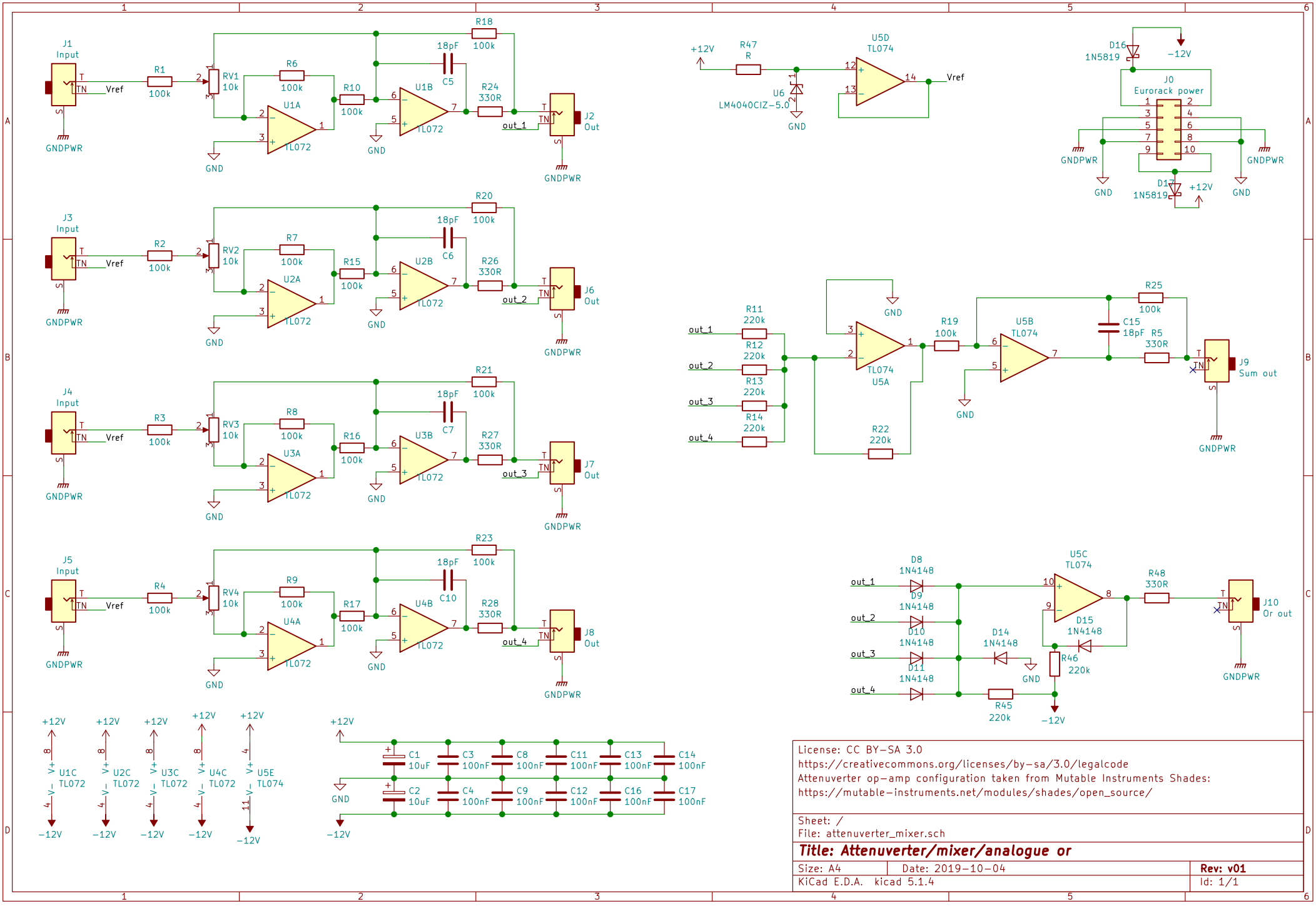

License: CC BY-SA 3.0
https://creativecommons.org/licenses/by-sa/3.0/legalcode
Attenuverter op-amp configuration taken from Mutable Instruments Shades:
https://mutable-instruments.net/modules/shades/open_source/

Sheet: /
File: attenuverter_mixer.sch

Title: Attenuverter/mixer/analogue or

Size: A4	Date: 2019-10-04	**Rev: v01**
KiCad E.D.A. kicad 5.1.4		Id: 1/1