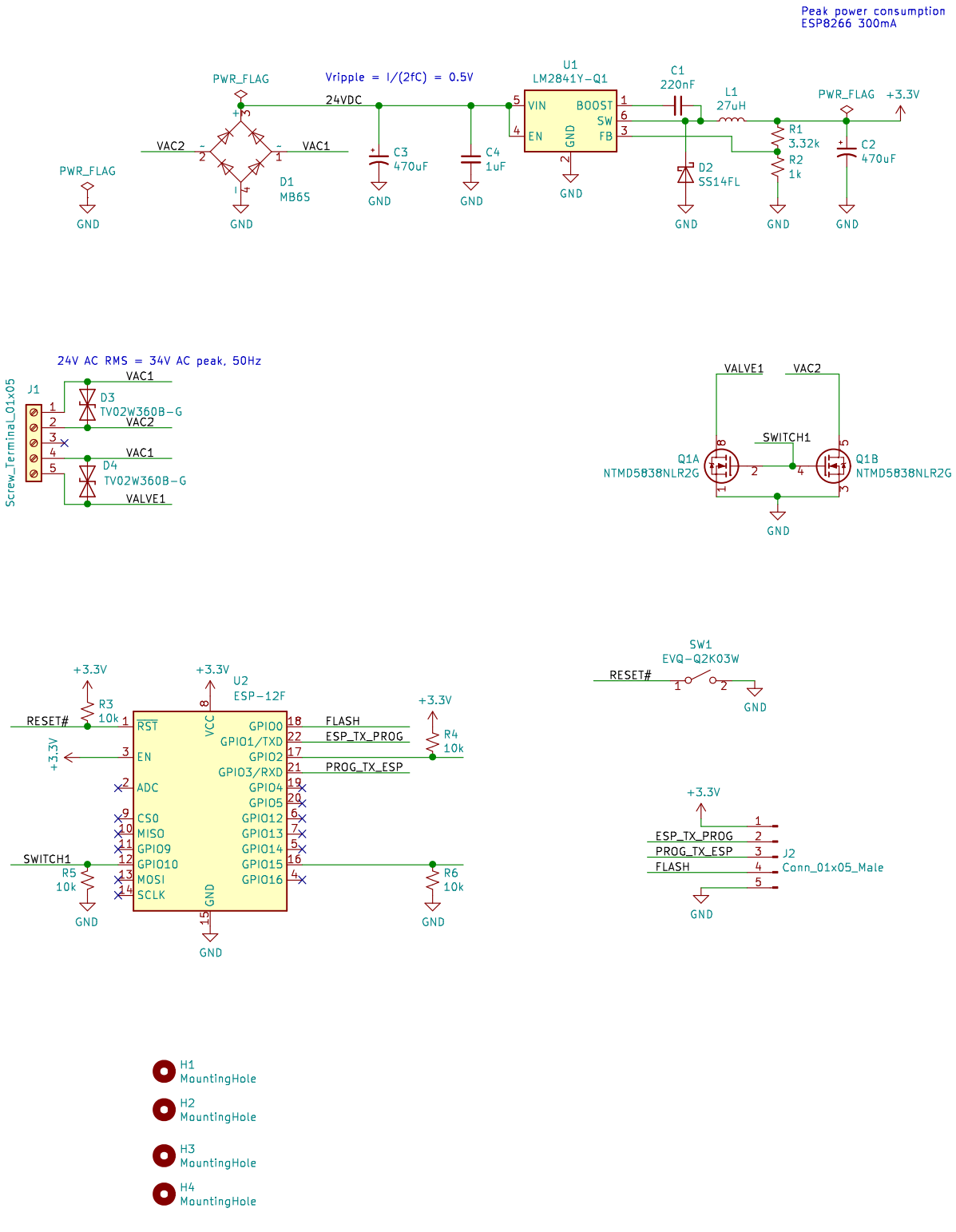

Sheet: /
File: example.sch

Title: LCA2020 Kicad Example

Size: A4	Date: 2020-01-12	Rev: CP1
KiCad E.D.A. kicad 5.0.2+dfsg1-1		Id: 1/1