REVISIONS			
REV	DESCRIPTION	DATE	APPROVED
–	INITIAL RELEASE	10/31/01	G. SAKONA

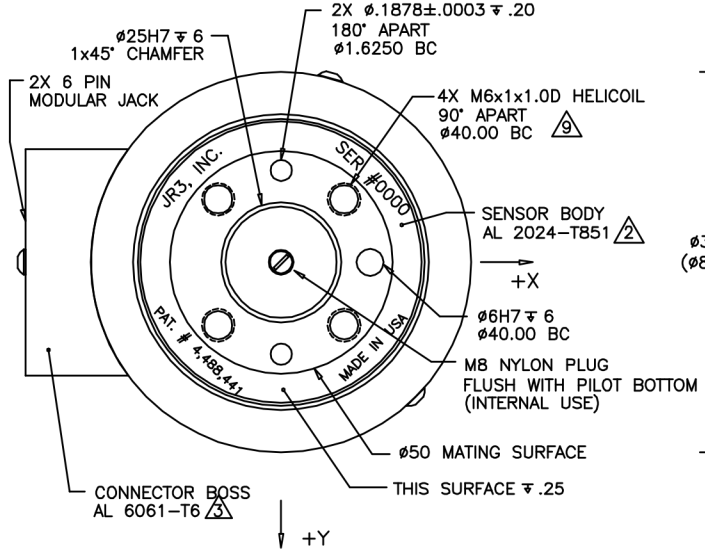

TOOL VIEW

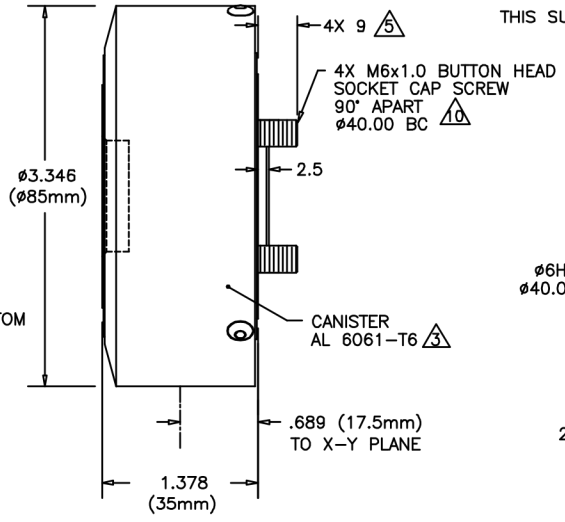

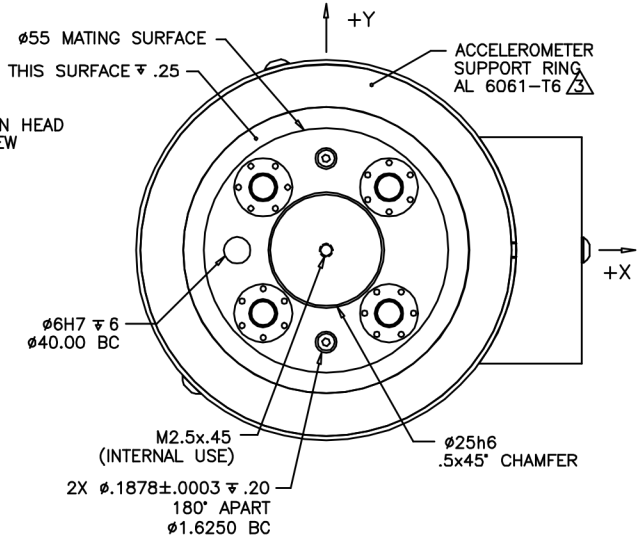

ROBOT VIEW

NOTES:

1. DIMENSIONS ARE IN INCHES UNLESS OTHERWISE NOTED.
2. TYPE 2, CLASS 2, BLACK ANODIZE.
3. TYPE 2, CLASS 2, BLUE ANODIZE.
4. AVAILABLE LOAD RATINGS INCLUDE: 15, 25, 50LB, WHERE:
   FULL SCALE Fx, Fy = SENSOR RATING
   FULL SCALE Fz = SENSOR RATING * 2
   FULL SCALE Mx, My, Mz = SENSOR RATING * NOMINAL DIAMETER (2.6in)
5. LENGTH OF CAPTIVE BOLT PROJECTION MAY BE ALTERED PER CUSTOMER REQUEST.
6. AXES SHOWN ASSUME OPPOSITE SIDE HELD FIXED.
7. ROBOT VIEW IS RIGHT HAND RULE (JR3 STANDARD). THIS FORCES TOOL VIEW TO BE LEFT HAND RULE.
8. TORQUE MOUNTING SCREWS TO 10Nm (88inlb) IN 3 EQUAL STEPS, FOLLOWING A 1–3–2–4 SEQUENCE.
9. MAXIMUM ALLOWABLE SCREW PENETRATION INTO SENSOR TOOL SIDE IS 8mm (.30in).
10. SCREWS ARE CAPTIVE, FREE TO ROTATE, AND ACCESSIBLE WITH HEX KEY THRU SENSOR TOOL SIDE.

TITLE: INTERFACE, 85M35 SENSOR, 12DOF, I40, DIGITAL		
MAT'L: AS SHOWN	MODEL: 85M35A–I40	DRAWN: GCS
TOLERANCES: (UNLESS OTHERWISE NOTED) X = ±.25mm, .X = ±.10mm, .XX = ±.025mm, ANGLES = ±0.1°		SCALE: 1/1 AND NOTED
		DWG SIZE: B
		DWG NO: 7522 — REV: –
JR3, INC.	WOODLAND, CA 95776	SHEET 1 OF 1

AUTHORIZED COPY