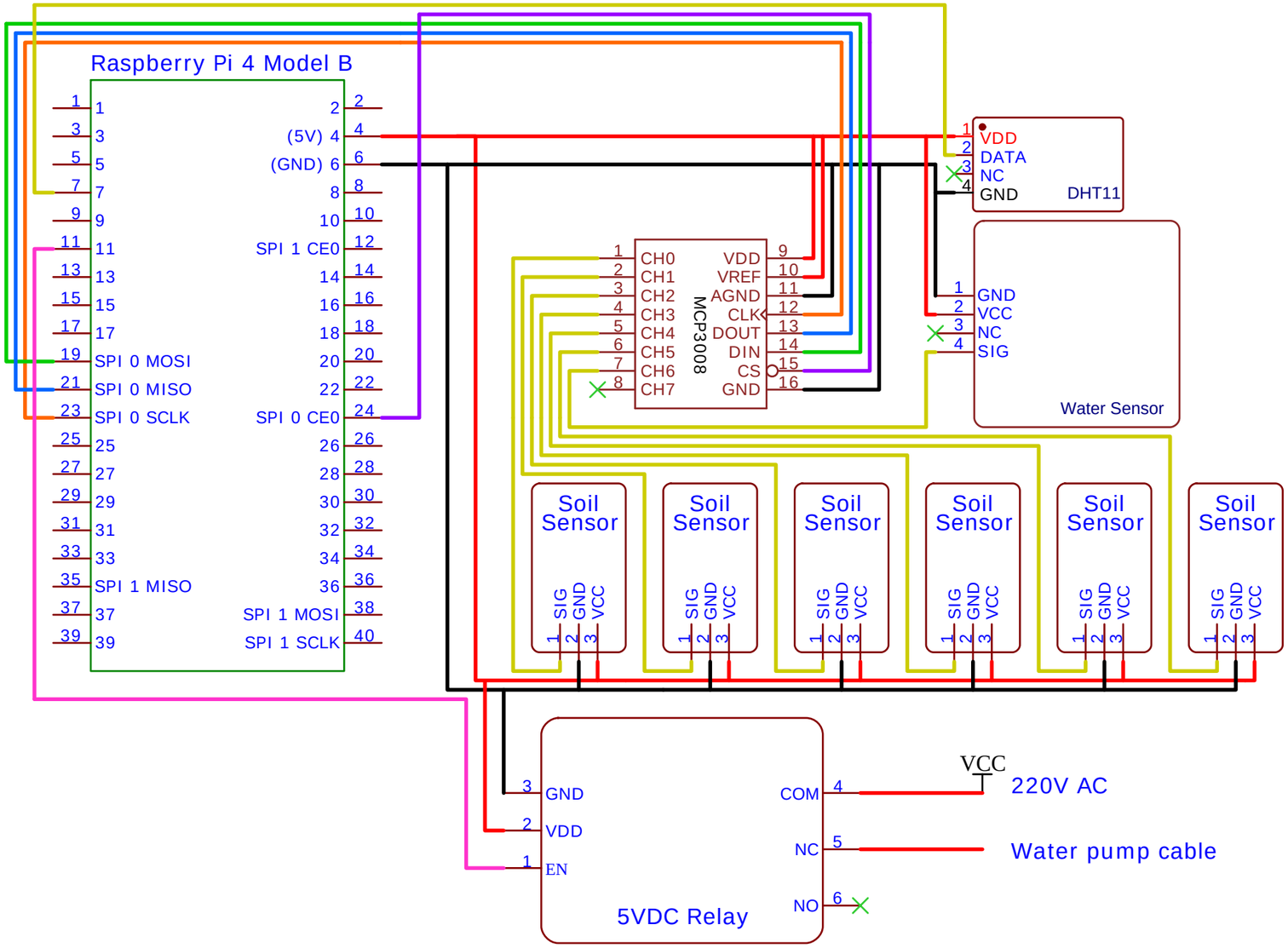

TITLE: Greenhouse schematics		REV: 1.0
EasyEDA	Company: In-House Greenhouse	Sheet: 1/1
	Date: 2022-05-18 Drawn By: Luca Di Bello	