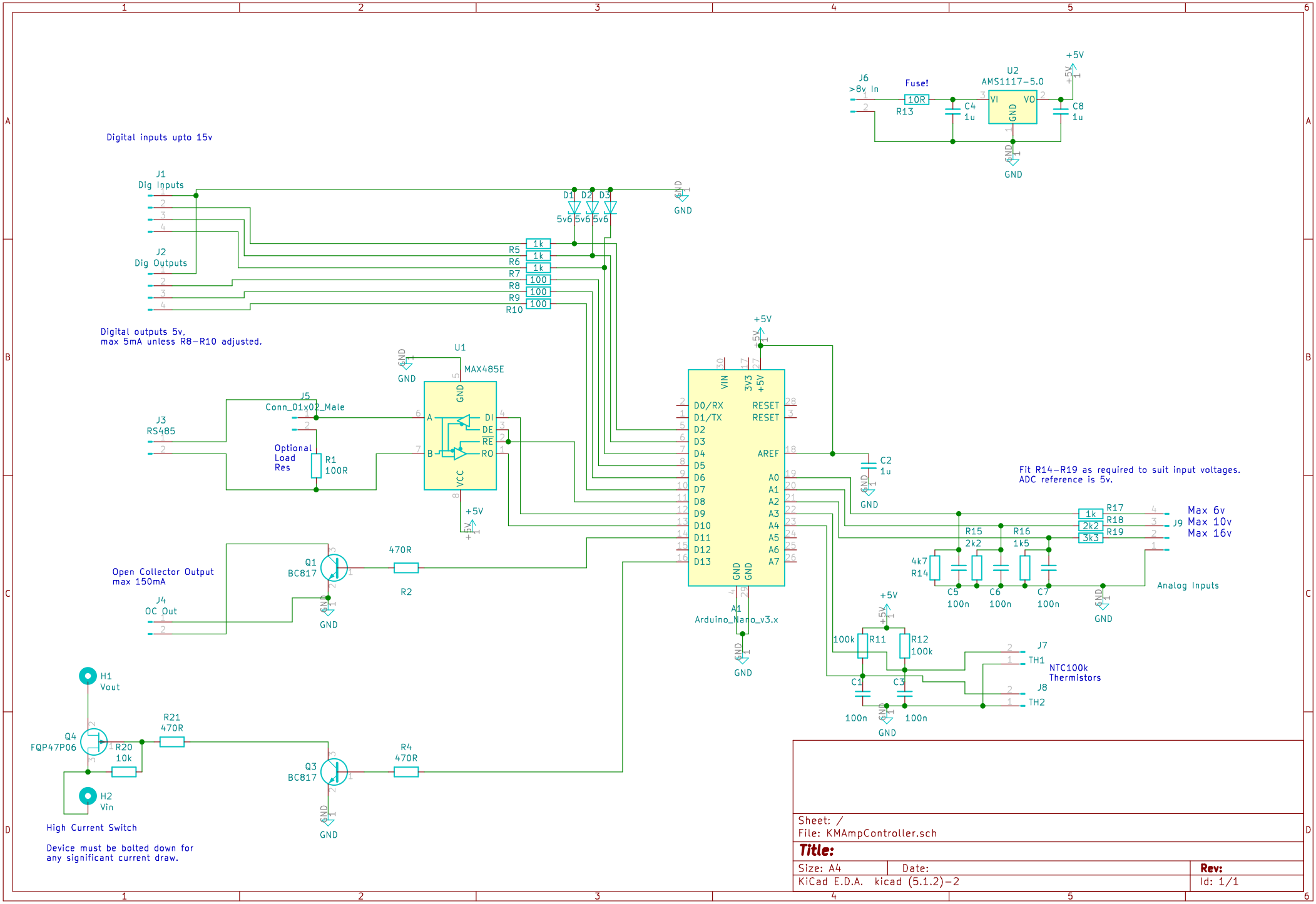
Digital inputs upto 15v
J1
Dig Inputs
J2
Dig Outputs
Digital outputs 5v,
max 5mA unless R8-R10 adjusted.
D1 D2 D3
5v6 5v6 5v6
R5 1k
R6 1k
R7 1k
R8 100
R9 100
R10 100
GND
U1
MAX485E
J5
Conn_01x02_Male
J3
RS485
Optional
Load
Res
R1
100R
A
B
DI
DE
RE
RO
VCC
+5V
Open Collector Output
max 150mA
J4
OC Out
Q1
BC817
470R
R2
H1
Vout
Q4
FQP47P06
R20
10k
R21
470R
H2
Vin
High Current Switch
Device must be bolted down for
any significant current draw.
Q3
BC817
R4
470R
J6
>8v In
Fuse!
10R
R13
C4
1u
U2
AMS1117-5.0
VI
VO
GND
C8
1u
VIN
3V3
D0/RX
D1/TX
D2
D3
D4
D5
D6
D7
D8
D9
D10
D11
D12
D13
RESET
AREF
A0
A1
A2
A3
A4
A5
A6
A7
Arduino_Nano_v3.x
C2
1u
Fit R14-R19 as required to suit input voltages.
ADC reference is 5v.
R17 1k
R18 2k2
R19 3k3
J9
Max 6v
Max 10v
Max 16v
R15 2k2
R16 1k5
4k7
R14
C5
100n
C6
100n
C7
100n
Analog Inputs
R11 100k
R12 100k
C1
100n
C3
100n
J7
TH1
J8
TH2
NTC100k
Thermistors
Sheet: /
File: KMAmpController.sch
Title:
Size: A4
Date:
Rev:
KiCad E.D.A. kicad (5.1.2)-2
Id: 1/1