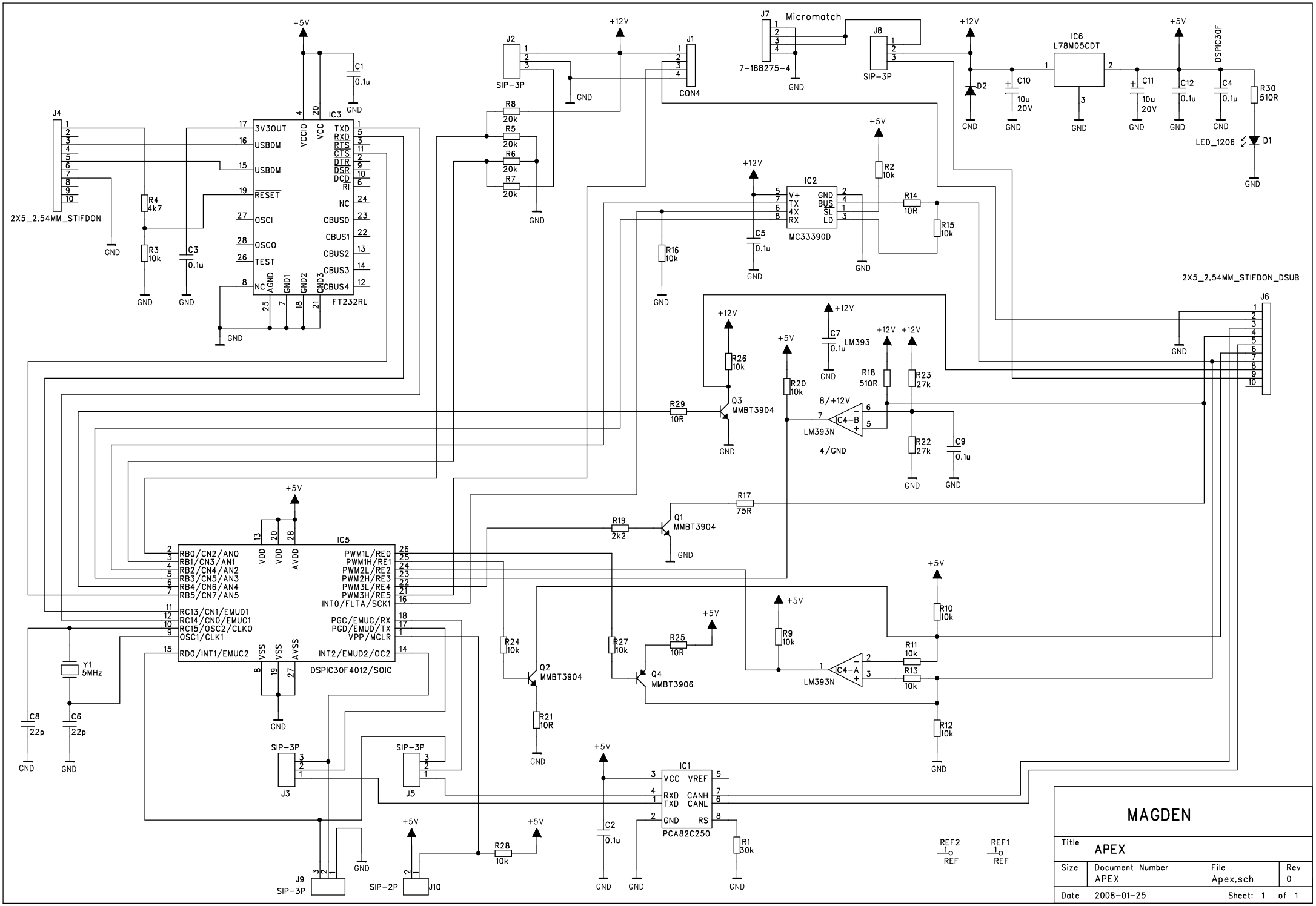
MAGDEN
Title APEX
Size Document Number APEX File Apex.sch Rev 0
Date 2008-01-25 Sheet: 1 of 1
IC3 FT232RL
IC5 DSPIC30F4012/SOIC
IC1 PCA82C250
IC2 MC33390D
IC6 L78M05CDT
J7 Micromatch 7-188275-4
J4 2X5_2.54MM_STIFDON
J6 2X5_2.54MM_STIFDON_DSUB
J1 CON4
J2 SIP-3P
J8 SIP-3P
J3 SIP-3P
J5 SIP-3P
J9 SIP-3P
J10 SIP-2P
Q1 MMBT3904
Q2 MMBT3904
Q3 MMBT3904
Q4 MMBT3906
LM393N
LM393
LED_1206
Y1 5MHz
REF2 REF
REF1 REF