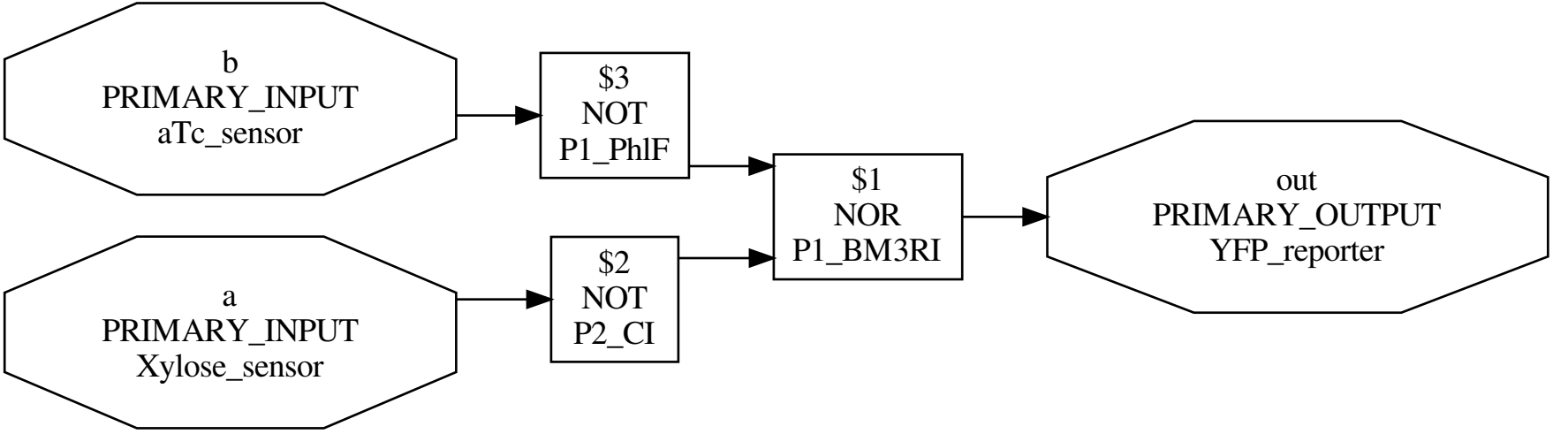
b
PRIMARY_INPUT
aTc_sensor
a
PRIMARY_INPUT
Xylose_sensor
$3
NOT
P1_PhlF
$2
NOT
P2_CI
$1
NOR
P1_BM3RI
out
PRIMARY_OUTPUT
YFP_reporter

and_gate