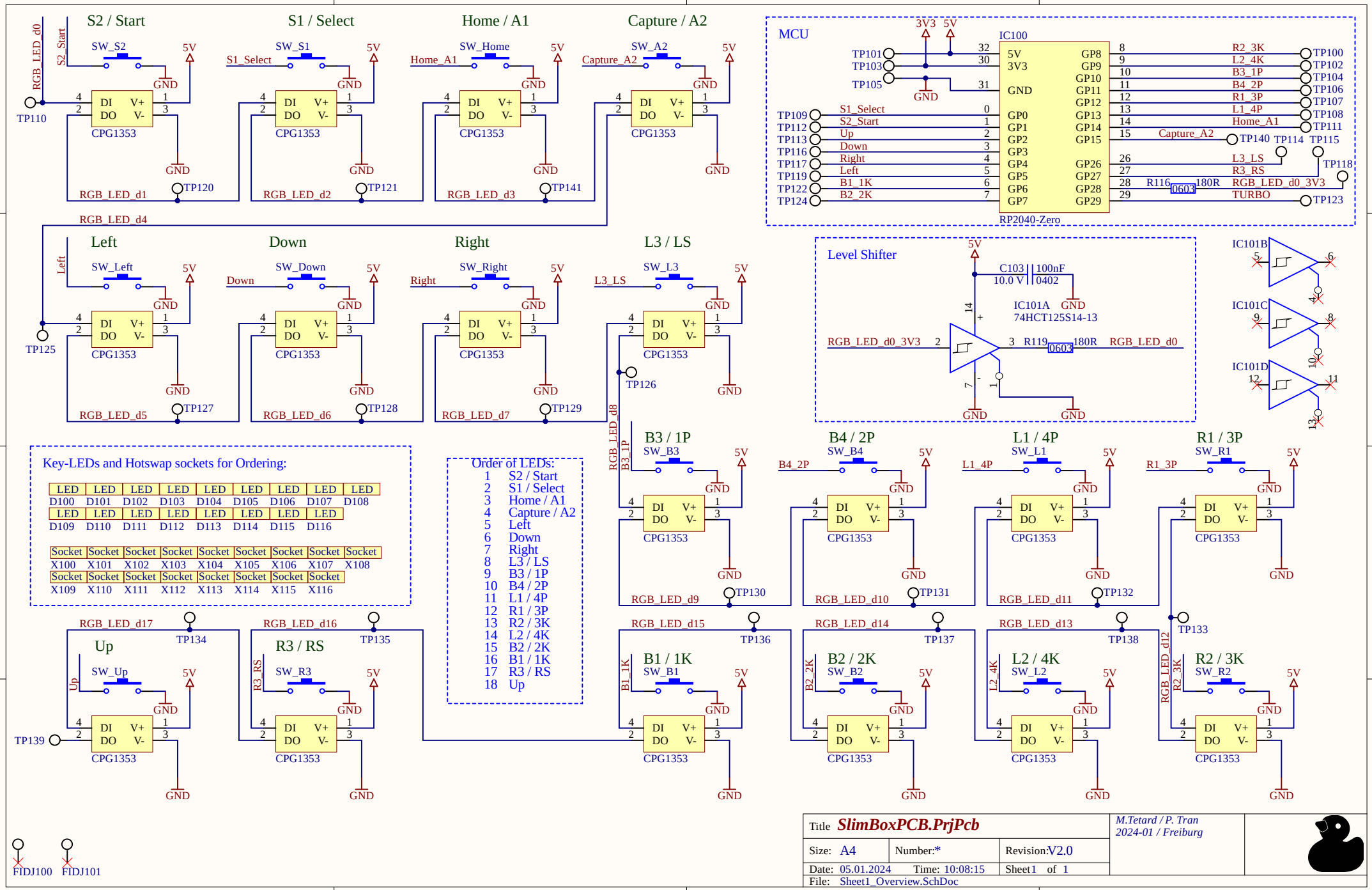
S2 / Start
S1 / Select
Home / A1
Capture / A2
Left
Down
Right
L3 / LS
B3 / 1P
B4 / 2P
L1 / 4P
R1 / 3P
Up
R3 / RS
B1 / 1K
B2 / 2K
L2 / 4K
R2 / 3K
MCU
IC100
RP2040-Zero
Level Shifter
IC101A
74HCT125S14-13
IC101B
IC101C
IC101D
CPG1353
Key-LEDs and Hotswap sockets for Ordering:
LED D100 D101 D102 D103 D104 D105 D106 D107 D108
LED D109 D110 D111 D112 D113 D114 D115 D116
Socket X100 X101 X102 X103 X104 X105 X106 X107 X108
Socket X109 X110 X111 X112 X113 X114 X115 X116
Order of LEDs:
1 S2 / Start
2 S1 / Select
3 Home / A1
4 Capture / A2
5 Left
6 Down
7 Right
8 L3 / LS
9 B3 / 1P
10 B4 / 2P
11 L1 / 4P
12 R1 / 3P
13 R2 / 3K
14 L2 / 4K
15 B2 / 2K
16 B1 / 1K
17 R3 / RS
18 Up
FIDJ100
FIDJ101
Title SlimBoxPCB.PrjPcb
M.Tetard / P. Tran
2024-01 / Freiburg
Size: A4
Number:*
Revision:V2.0
Date: 05.01.2024
Time: 10:08:15
Sheet1 of 1
File: Sheet1_Overview.SchDoc

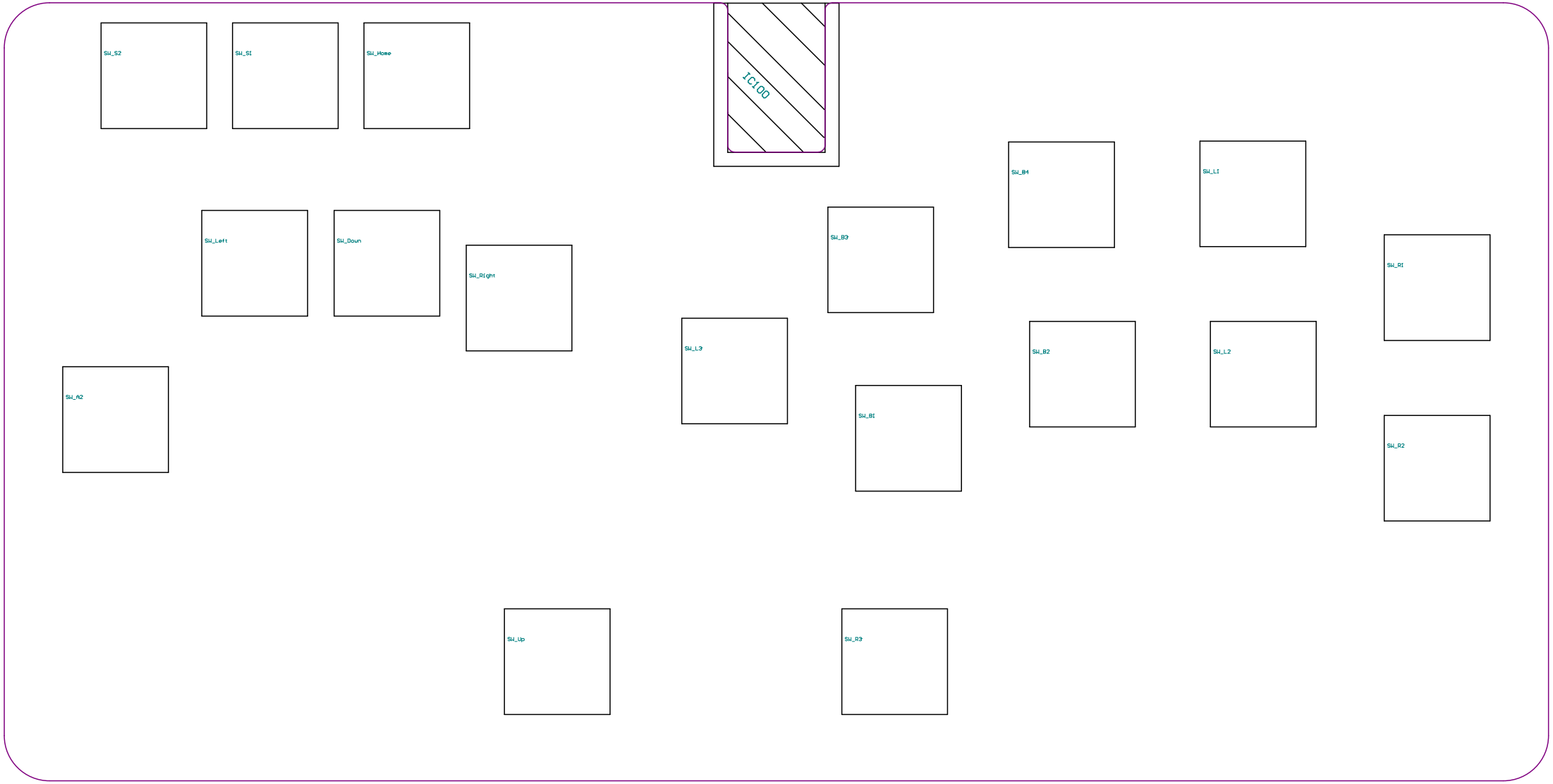
SW_S2
SW_S1
SW_Home
IC100
SW_B4
SW_L1
SW_Left
SW_Down
SW_Right
SW_B3
SW_R1
SW_L3
SW_B2
SW_L2
SW_A2
SW_B1
SW_R2
SW_Up
SW_R3

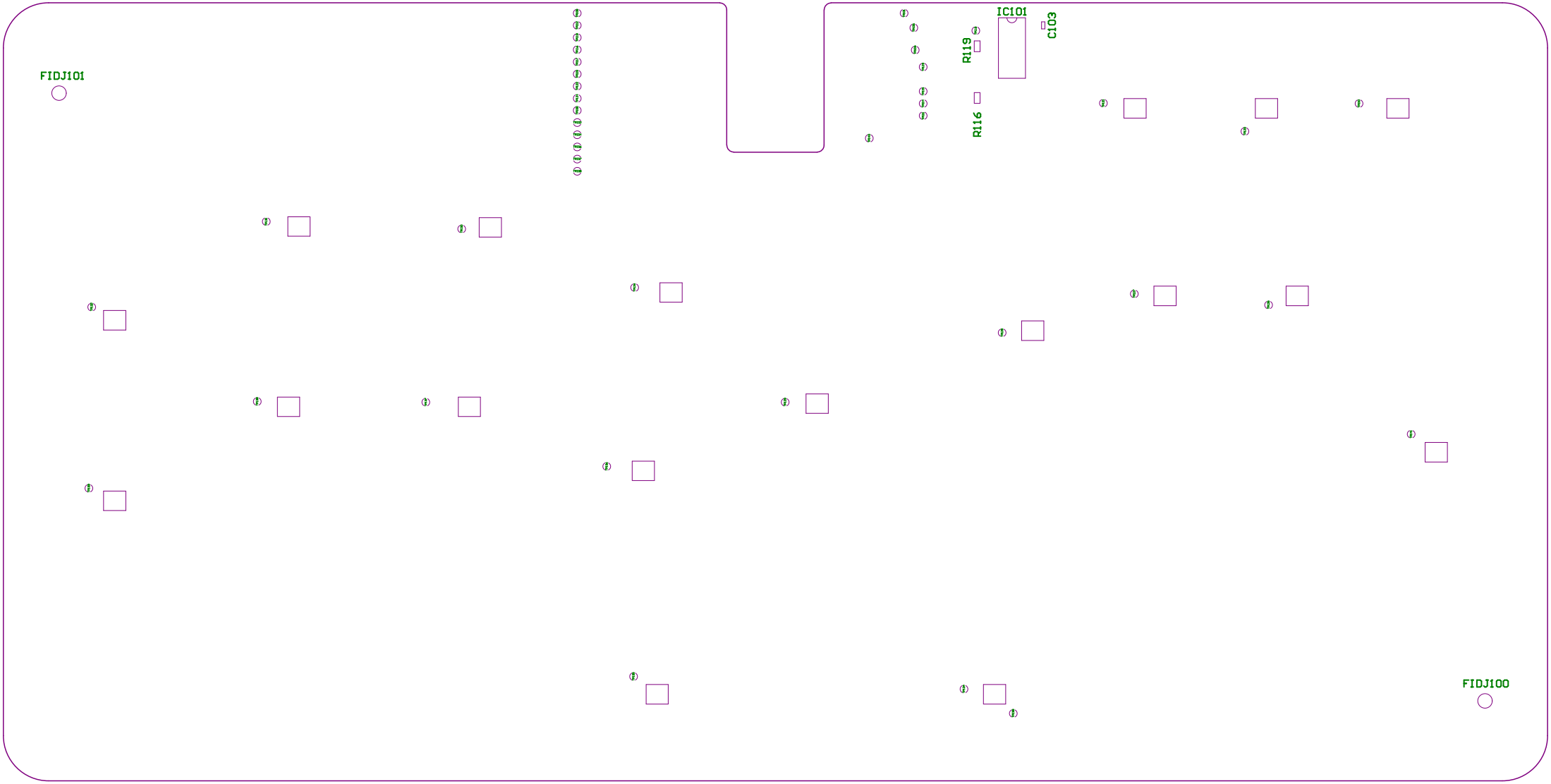
FIDJ101
IC101
C103
R119
R116
FIDJ100