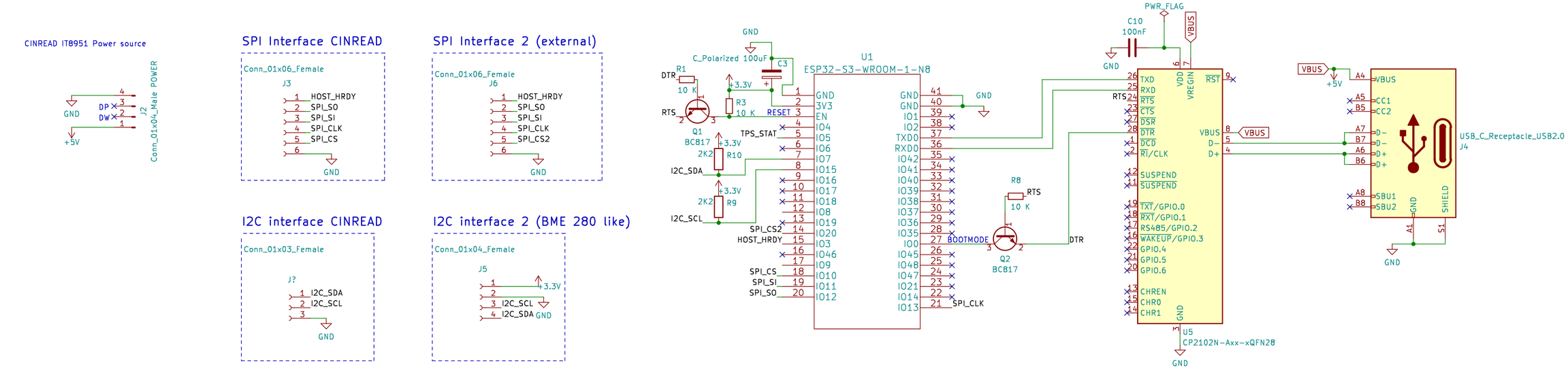
CINREAD IT8951 Power source
J2
Conn_01x04_Male POWER
DP
DW
GND
+5V
SPI Interface CINREAD
Conn_01x06_Female
J3
HOST_HRDY
SPI_SO
SPI_SI
SPI_CLK
SPI_CS
SPI Interface 2 (external)
Conn_01x06_Female
J6
HOST_HRDY
SPI_SO
SPI_SI
SPI_CLK
SPI_CS2
I2C interface CINREAD
Conn_01x03_Female
J?
I2C_SDA
I2C_SCL
I2C interface 2 (BME 280 like)
Conn_01x04_Female
J5
3.3V
I2C_SCL
I2C_SDA
U1
ESP32-S3-WROOM-1-N8
C_Polarized 100uF
C3
R1
10 K
DTR
RTS
Q1
BC817
R3
10 K
RESET
TPS_STAT
R10
2K2
I2C_SDA
R9
2K2
I2C_SCL
SPI_CS2
HOST_HRDY
SPI_CS
SPI_SI
SPI_SO
SPI_CLK
BOOTMODE
R8
10 K
Q2
BC817
PWR_FLAG
C10
100nF
VBUS
U5
CP2102N-Axx-xQFN28
TXD
RXD
RTS
CTS
DSR
DTR
DCD
RI/CLK
SUSPEND
TXT/GPIO.0
RXT/GPIO.1
RS485/GPIO.2
WAKEUP/GPIO.3
GPIO.4
GPIO.5
GPIO.6
CHREN
CHR0
CHR1
VDD
VREGIN
RST
D-
D+
USB_C_Receptacle_USB2.0
J4
SHIELD
Battery jack
J1
Jack-DC
BAT+
LiPo 3.7V charging circuit + 3.3 V step down
3.3V for S3 MCU
U2
TPS2113APWR
IN1
IN2
VSNS
ILIM
OUT
STAT
EN_N
C1
100nF
C2
100nF
R5
400
10 K
R7
U4
MCP1700-3302E_SOT23
C5
10uF
C6
10uF
+3.3V
TPS_STAT
STAT should be HIGH
if USB is connected
and LOW when is battery
powered
D1
1N5817
D2
GRE
D3
RED
R2
5K
R4
5K
U3
TP4056
VCC
CE
PP
CHRG
STDBY
BAT
TEMP
PROG
C4
100nF
R6
6.8K
3V to 5V BOOST converter MT3608
STAT should be HIGH if VBUS is connected
and let 5V flow from USB. Here it flows always —>
L1
22 uH
D4
1N5817
U6
MT3608
IN
EN
SW
FB
R11
110K
R12
15K
C7
22uF
C8
22uF