REVISIONS				
ZONE	REV	DESCRIPTION	DATE	APPROVED

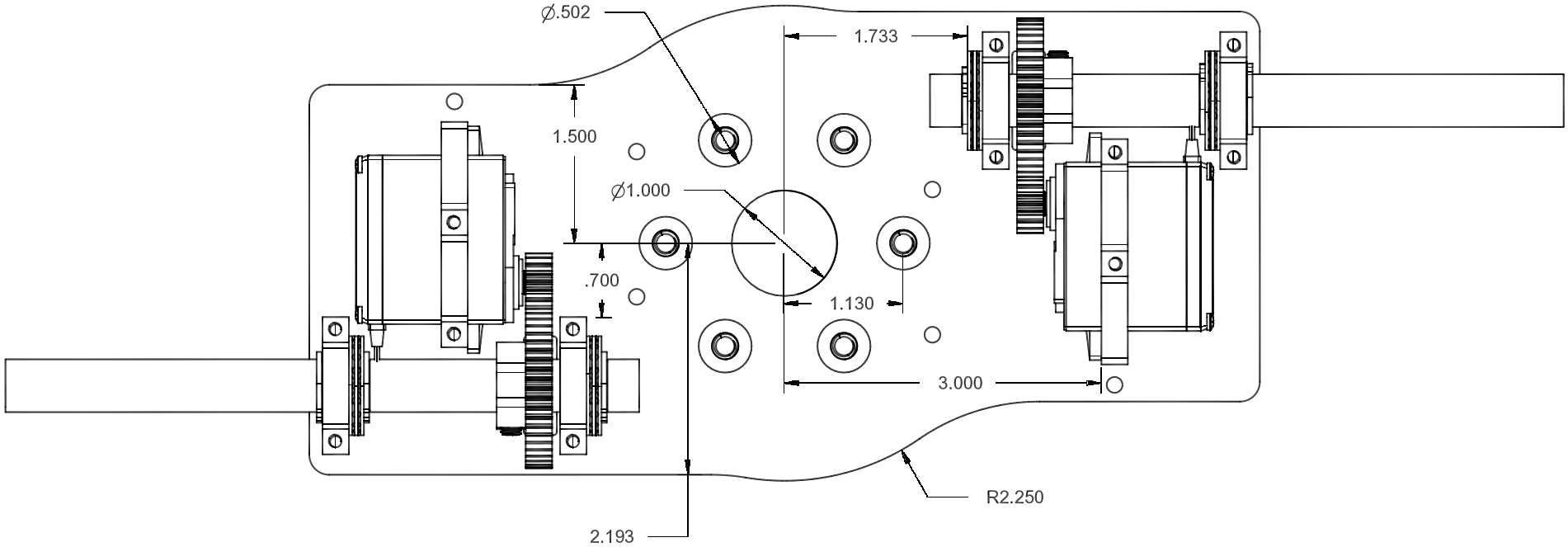

	DRAWN	DATE				
	CHECKED					
	QA					
	MFG		SIZE A	FSCM NO.	DWG NO.	REV
	APPROVED		SCALE 1:1		SHEET 1 OF 1	