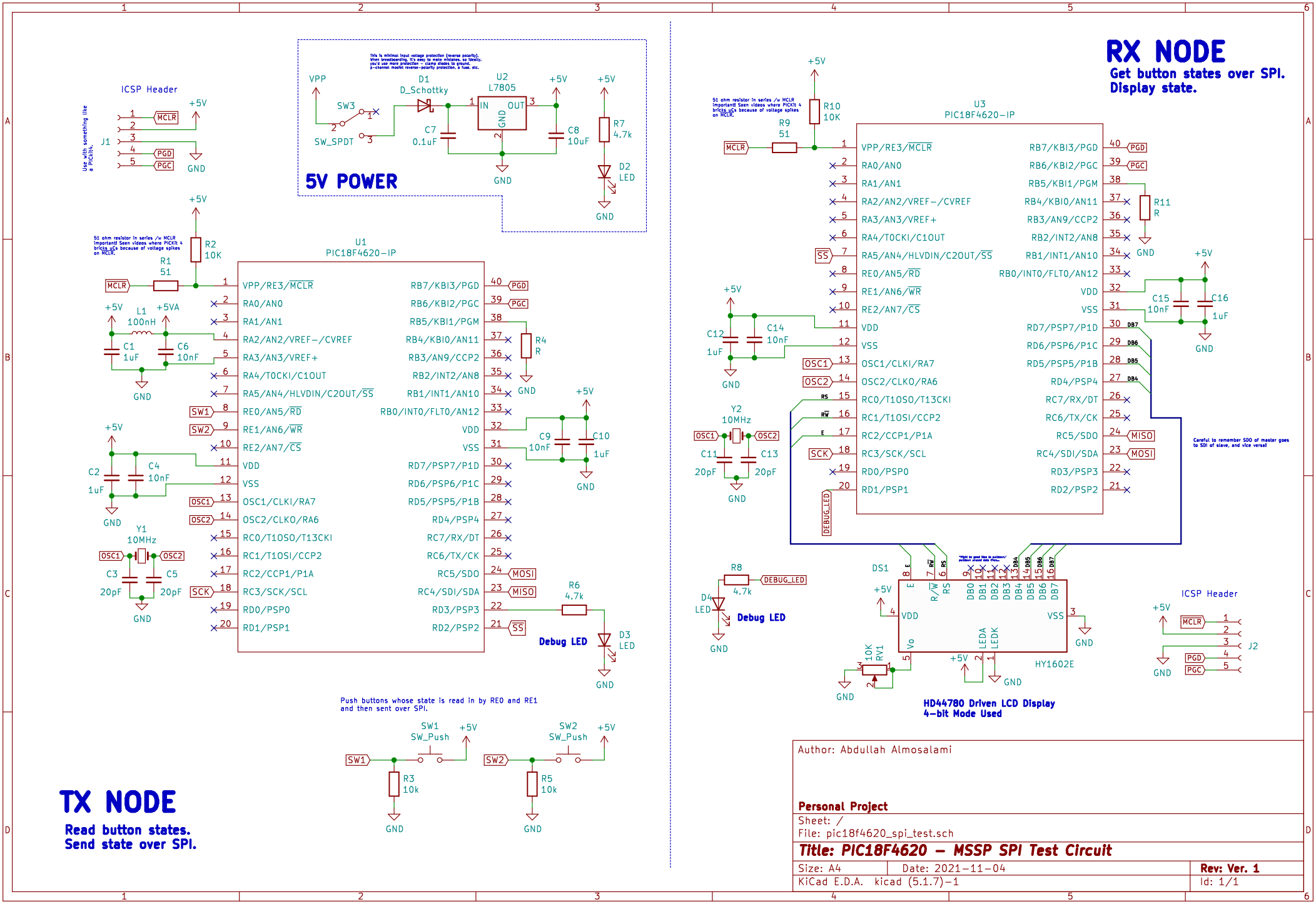
TX NODE
Read button states.
Send state over SPI.
5V POWER
This is minimal input voltage protection (reverse polarity).
When breadboarding, it's easy to make mistakes, so ideally,
you'd use more protection - clamp diodes to ground,
p-channel mosfet reverse-polarity protection, a fuse, etc.
VPP
SW3
SW_SPDT
D1
D_Schottky
U2
L7805
IN
OUT
GND
C7
0.1uF
C8
10uF
R7
4.7k
D2
LED
+5V
GND
ICSP Header
J1
MCLR
PGD
PGC
Use with something like a PICkit.
51 ohm resistor in series /w MCLR
Important! Seen videos where PICkit 4
bricks uCs because of voltage spikes
on MCLR.
R2
10K
R1
51
U1
PIC18F4620-IP
VPP/RE3/MCLR
RA0/AN0
RA1/AN1
RA2/AN2/VREF-/CVREF
RA3/AN3/VREF+
RA4/T0CKI/C1OUT
RA5/AN4/HLVDIN/C2OUT/SS
RE0/AN5/RD
RE1/AN6/WR
RE2/AN7/CS
VDD
VSS
OSC1/CLKI/RA7
OSC2/CLKO/RA6
RC0/T1OSO/T13CKI
RC1/T1OSI/CCP2
RC2/CCP1/P1A
RC3/SCK/SCL
RD0/PSP0
RD1/PSP1
RB7/KBI3/PGD
RB6/KBI2/PGC
RB5/KBI1/PGM
RB4/KBI0/AN11
RB3/AN9/CCP2
RB2/INT2/AN8
RB1/INT1/AN10
RB0/INT0/FLT0/AN12
RD7/PSP7/P1D
RD6/PSP6/P1C
RD5/PSP5/P1B
RD4/PSP4
RC7/RX/DT
RC6/TX/CK
RC5/SDO
RC4/SDI/SDA
RD3/PSP3
RD2/PSP2
L1
100nH
+5VA
C1
1uF
C6
10nF
C2
1uF
C4
10nF
Y1
10MHz
C3
20pF
C5
20pF
R4
R
C9
10nF
C10
1uF
R6
4.7k
D3
LED
Debug LED
Push buttons whose state is read in by RE0 and RE1
and then sent over SPI.
SW1
SW_Push
SW2
R3
10k
R5
10k
RX NODE
Get button states over SPI.
Display state.
R10
10K
R9
51
U3
PIC18F4620-IP
R11
R
C12
1uF
C14
10nF
C15
10nF
C16
1uF
Y2
10MHz
C11
20pF
C13
20pF
DEBUG_LED
Careful to remember SDO of master goes
to SDI of slave, and vice versa!
R8
4.7k
D4
LED
Debug LED
DS1
HY1602E
RV1
10K
ICSP Header
J2
HD44780 Driven LCD Display
4-bit Mode Used
Author: Abdullah Almosalami
Personal Project
Sheet: /
File: pic18f4620_spi_test.sch
Title: PIC18F4620 - MSSP SPI Test Circuit
Size: A4
Date: 2021-11-04
Rev: Ver. 1
KiCad E.D.A. kicad (5.1.7)-1
Id: 1/1