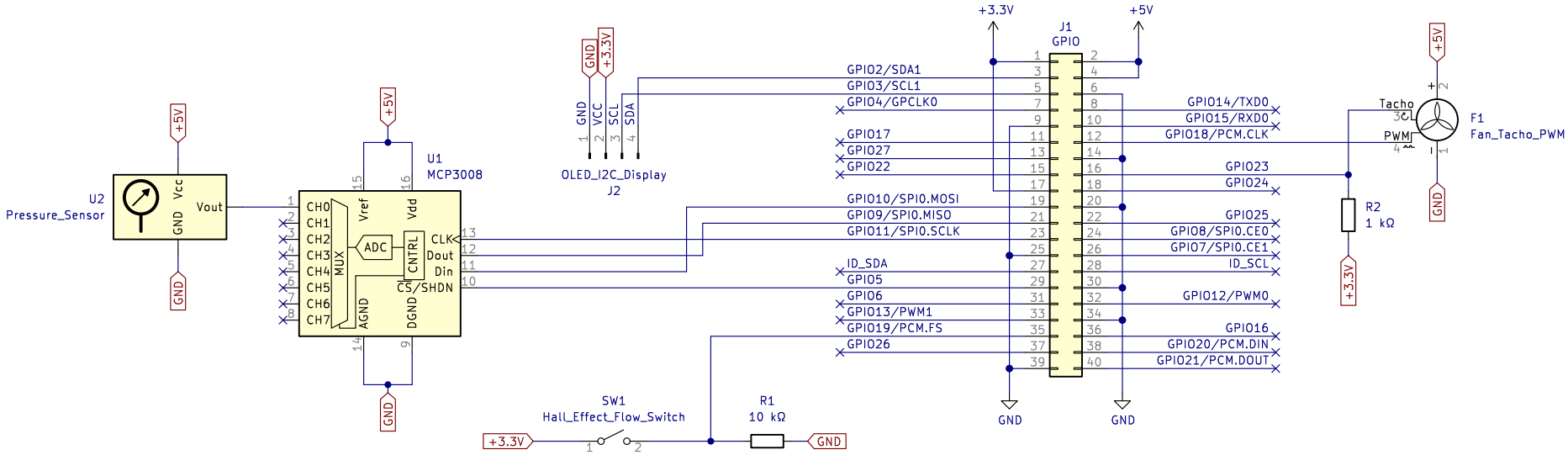

Matthew Epland

Sheet: /

File: circuit_diagram.kicad_sch

Title: Chance of Showers

Size: USLetter	Date: 2023-11-26	**Rev:**
KiCad E.D.A. kicad 7.0.9-1.fc39		Id: 1/1