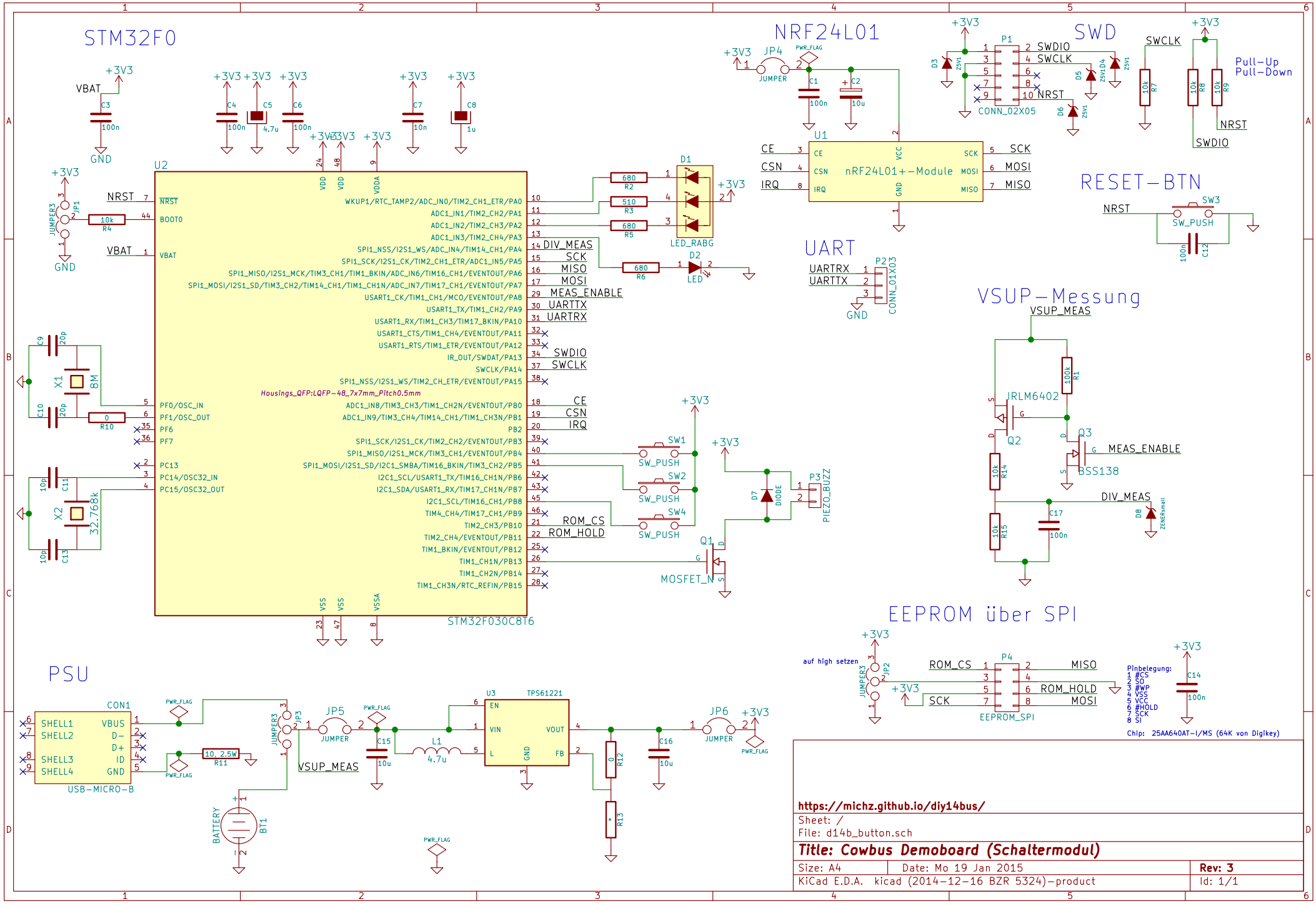
STM32F0
U2
STM32F030C8T6
Housings_QFP:LQFP-48_7x7mm_Pitch0.5mm
NRF24L01
U1
nRF24L01+-Module
CE
CSN
IRQ
SCK
MOSI
MISO
SWD
P1
CONN_02X05
SWDIO
SWCLK
NRST
Pull-Up
Pull-Down
RESET-BTN
SW3
SW_PUSH
UART
P2
CONN_01X03
UARTRX
UARTTX
VSUP-Messung
VSUP_MEAS
IRLM6402
Q2
Q3
BSS138
MEAS_ENABLE
DIV_MEAS
EEPROM über SPI
P4
EEPROM_SPI
ROM_CS
ROM_HOLD
auf high setzen
Pinbelegung:
1 #CS
2 SO
3 #WP
4 VSS
5 VCC
6 #HOLD
7 SCK
8 SI
Chip: 25AA640AT-I/MS (64K von Digikey)
PSU
CON1
USB-MICRO-B
SHELL1
SHELL2
SHELL3
SHELL4
VBUS
D-
D+
ID
GND
BATTERY
BT1
U3
TPS61221
EN
VIN
VOUT
L
GND
FB
JP5
JP6
JUMPER
VSUP_MEAS
LED_RABG
LED
PIEZO_BUZZ
MOSFET_N
DIODE
ROM_CS
ROM_HOLD
DIV_MEAS
https://michz.github.io/diy14bus/
Sheet: /
File: d14b_button.sch
Title: Cowbus Demoboard (Schaltermodul)
Size: A4
Date: Mo 19 Jan 2015
Rev: 3
KiCad E.D.A. kicad (2014-12-16 BZR 5324)-product
Id: 1/1