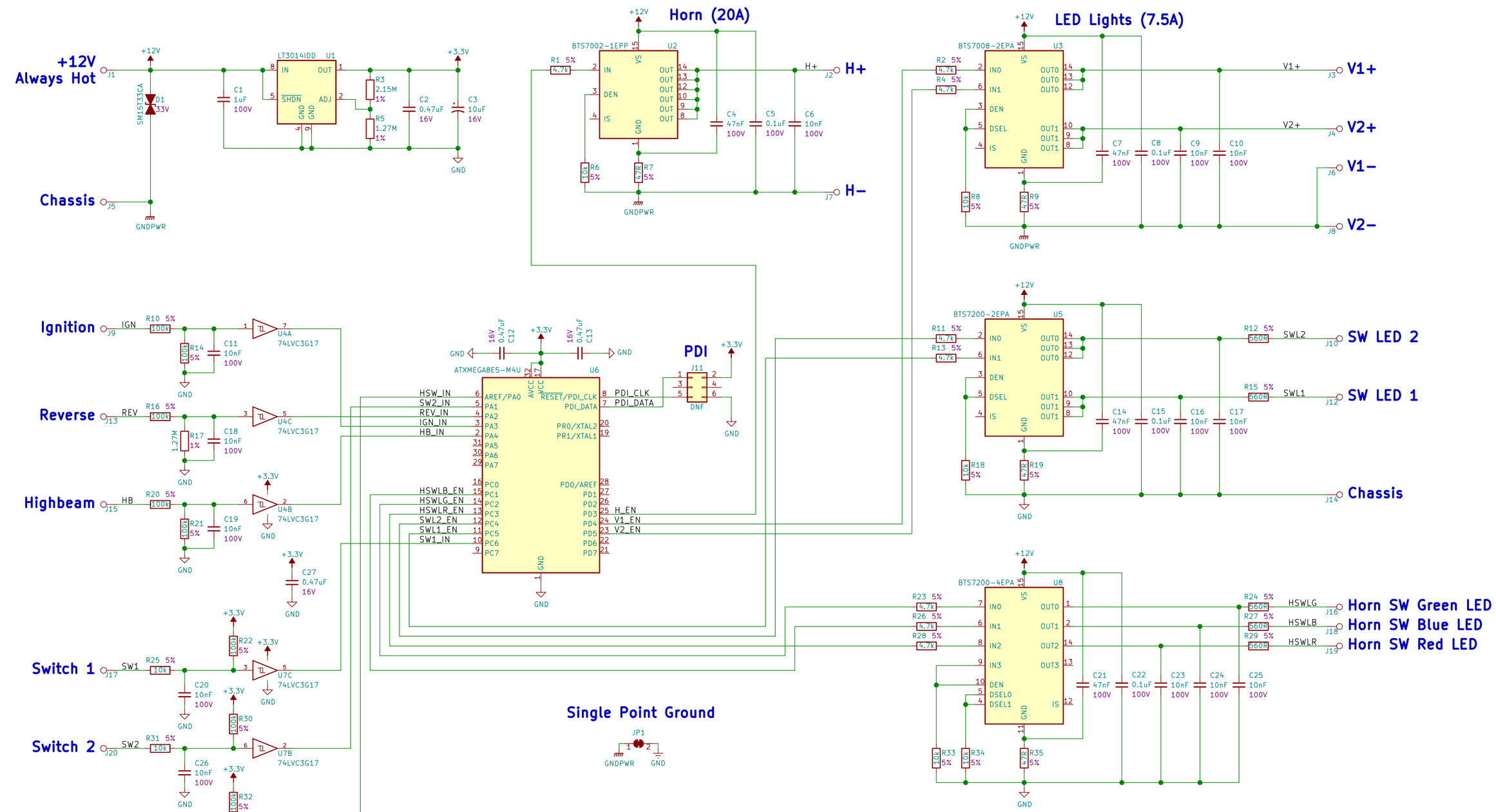

Notes:

1. This must have a 20 Amp fuse on the 12V input.
2. HSWLR_EN, HSWLG_EN, HSWLB_EN, SWL1_EN, SWL2_EN, V1_EN and V2_EN use Output Compare on timers to PWM LED intensity.
3. HSW_IN, SW1_IN and SW2_IN use Inverted IO Enable so that a '1' represents pressed.
4. V1 and V2 must be turned off when Horn is active.

Mike Lawrence

Sheet: /
File: ATV-Control.sch

Title: ATV Control PCB

Size: B	Date: October 2020	Rev: 1.0
KiCad E.D.A. kicad (5.1.7-0-10_14)		Id: 1/1