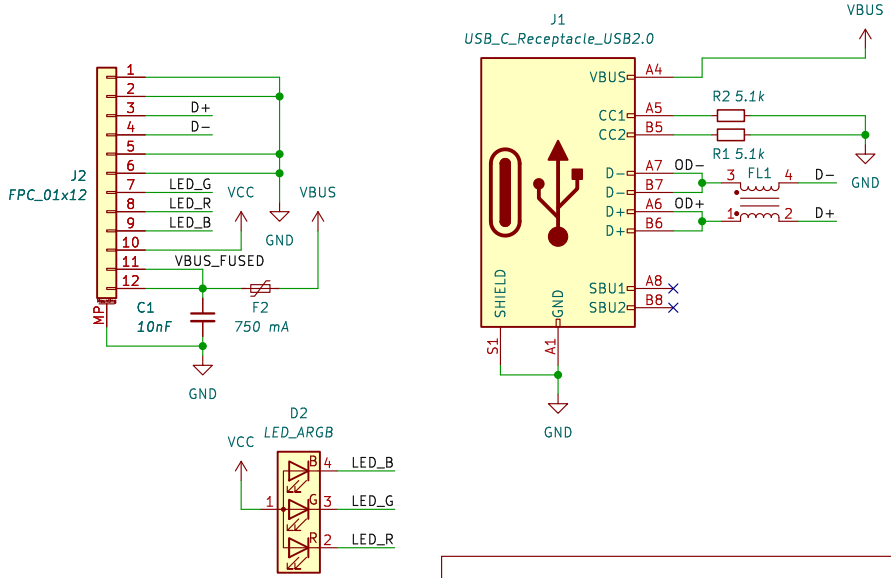

Licensed under CERN-OHL-W v2

Petr Moucha

Sheet: /
File: jds-040.kicad_sch

Title: USB-C Daughterboard – JDS-040

Size: A5	Date: 2024-02-10	**Rev: 1.2**
KiCad E.D.A. 8.0.1		Id: 1/1