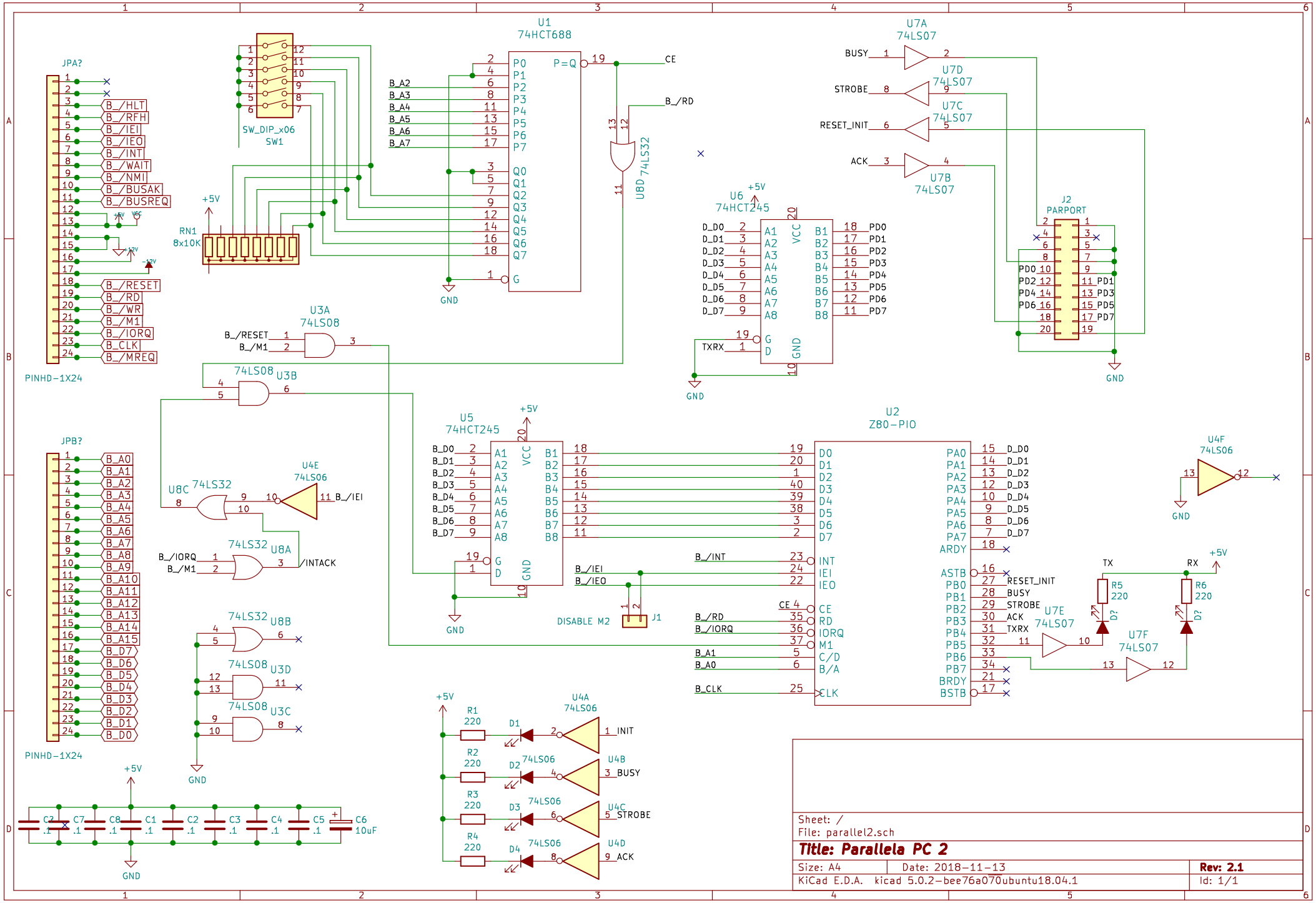
U1
74HCT688
P=Q
CE
B_/RD
UBD 74LS32
JPA?
PINHD-1X24
B_/HLT
B_/RFH
B_/IEI
B_/IEO
B_/INT
B_/WAIT
B_/NMI
B_/BUSAK
B_/BUSREQ
B_/RESET
B_/RD
B_/WR
B_/M1
B_/IORQ
B_CLK
B_/MREQ
SW_DIP_x06
SW1
RN1
8x10K
+5V
GND
U7A
74LS07
U7D
74LS07
U7C
74LS07
U7B
74LS07
BUSY
STROBE
RESET_INIT
ACK
U6
74HCT245
TXRX
J2
PARPORT
U3A
74LS08
U3B
74LS08
U8C
74LS32
U4E
74LS06
B_/IEI
U8A
74LS32
/INTACK
U8B
74LS32
U3D
74LS08
U3C
74LS08
JPB?
PINHD-1X24
U5
74HCT245
U2
Z80-PIO
DISABLE M2
J1
U4F
74LS06
TX
RX
R5
220
R6
220
U7E
74LS07
U7F
74LS07
R1
220
R2
220
R3
220
R4
220
D1
D2
D3
D4
U4A
74LS06
U4B
74LS06
U4C
74LS06
U4D
74LS06
INIT
BUSY
STROBE
ACK
C2
.1
C7
.1
C8
.1
C1
.1
C2
.1
C3
.1
C4
.1
C5
.1
C6
10uF
Sheet: /
File: parallel2.sch
Title: Parallela PC 2
Size: A4
Date: 2018-11-13
Rev: 2.1
KiCad E.D.A. kicad 5.0.2-bee76a070ubuntu18.04.1
Id: 1/1