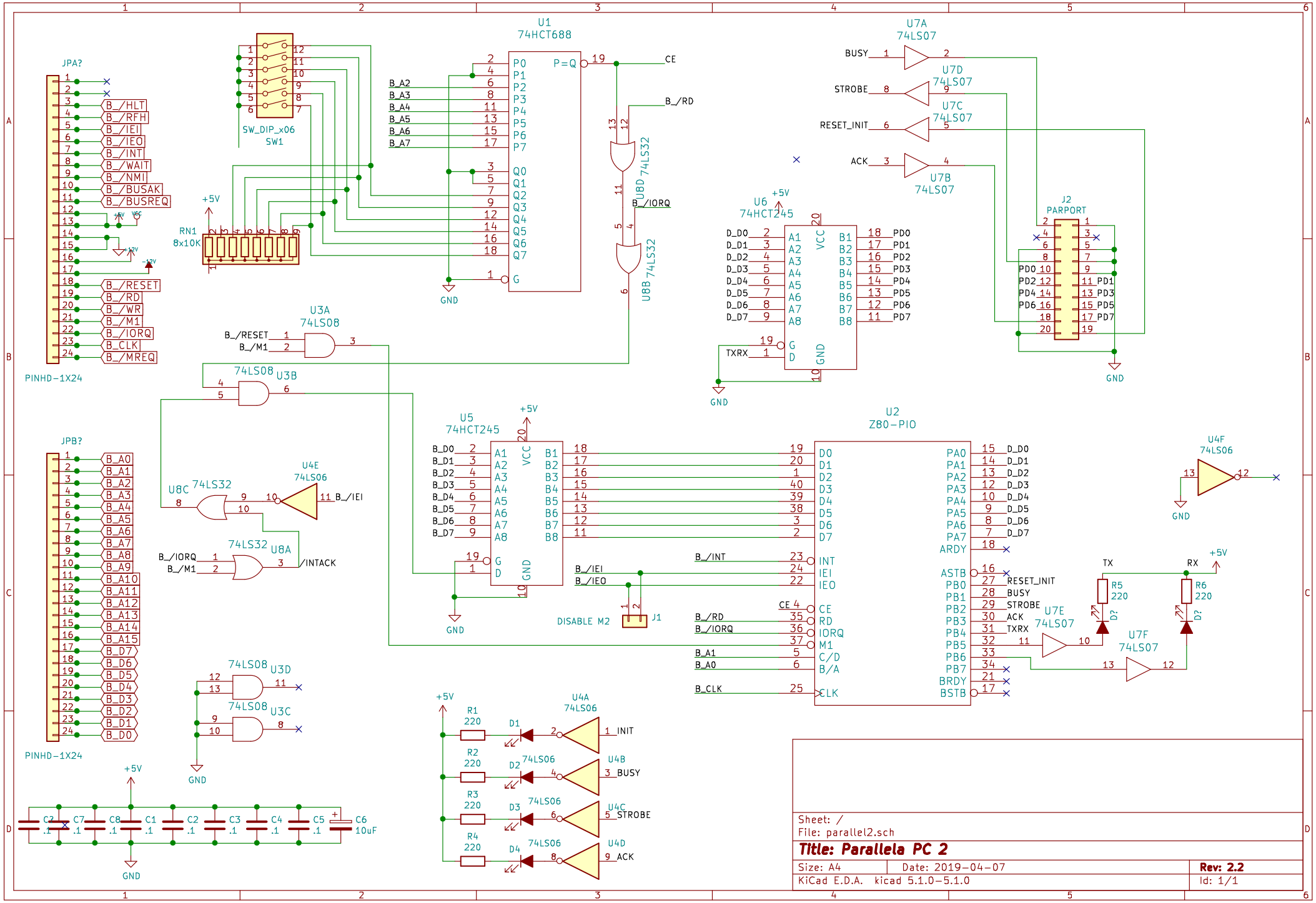
U1
74HCT688
P=Q
CE
B_/RD
B_/IORQ
B_A2
B_A3
B_A4
B_A5
B_A6
B_A7
U8D 74LS32
U8B 74LS32
GND
JPA?
PINHD-1X24
B_/HLT
B_/RFH
B_/IEI
B_/IEO
B_/INT
B_/WAIT
B_/NMI
B_/BUSAK
B_/BUSREQ
B_/RESET
B_/RD
B_/WR
B_/M1
B_/IORQ
B_CLK
B_/MREQ
SW_DIP_x06
SW1
RN1
8x10K
+5V
U7A
74LS07
U7D
74LS07
U7C
74LS07
U7B
74LS07
BUSY
STROBE
RESET_INIT
ACK
U6
74HCT245
D_D0
D_D1
D_D2
D_D3
D_D4
D_D5
D_D6
D_D7
TXRX
PD0
PD1
PD2
PD3
PD4
PD5
PD6
PD7
J2
PARPORT
U3A
74LS08
U3B
74LS08
U5
74HCT245
B_D0
B_D1
B_D2
B_D3
B_D4
B_D5
B_D6
B_D7
U2
Z80-PIO
JPB?
PINHD-1X24
B_A0
B_A1
B_A2
B_A3
B_A4
B_A5
B_A6
B_A7
B_A8
B_A9
B_A10
B_A11
B_A12
B_A13
B_A14
B_A15
B_D7
B_D6
B_D5
B_D4
B_D3
B_D2
B_D1
B_D0
U8C 74LS32
U4E
74LS06
B_/IEI
U8A 74LS32
/INTACK
B_/IEI
B_/IEO
DISABLE M2
J1
B_/INT
B_/RD
B_/IORQ
B_A1
B_A0
B_CLK
CE
PA0
PA1
PA2
PA3
PA4
PA5
PA6
PA7
ARDY
ASTB
PB0
PB1
PB2
PB3
PB4
PB5
PB6
PB7
BRDY
BSTB
RESET_INIT
BUSY
STROBE
ACK
TXRX
U4F
74LS06
TX
RX
R5
220
R6
220
U7E
74LS07
U7F
74LS07
U3D
74LS08
U3C
74LS08
R1
220
R2
220
R3
220
R4
220
D1
D2
D3
D4
U4A
74LS06
U4B
74LS06
U4C
74LS06
U4D
INIT
BUSY
STROBE
ACK
C2
.1
C7
.1
C8
.1
C1
.1
C2
.1
C3
.1
C4
.1
C5
.1
C6
10uF
Sheet: /
File: parallel2.sch
Title: Parallela PC 2
Size: A4
Date: 2019-04-07
Rev: 2.2
KiCad E.D.A. kicad 5.1.0-5.1.0
Id: 1/1