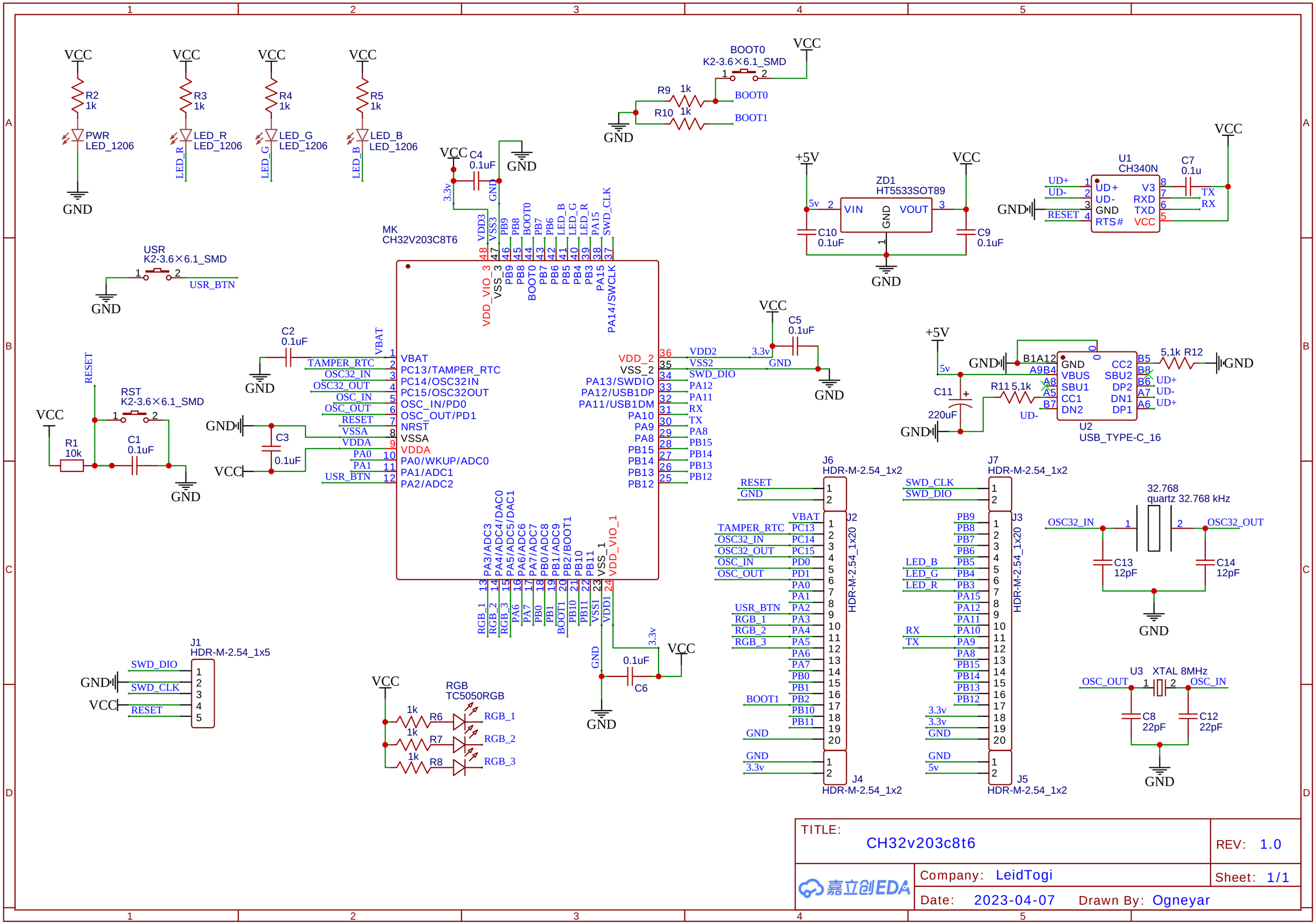
VCC
R2 1k
PWR LED_1206
GND
R3 1k
LED_R LED_1206
R4 1k
LED_G LED_1206
R5 1k
LED_B LED_1206
BOOT0 K2-3.6×6.1_SMD
R9 1k
R10 1k
BOOT0
BOOT1
C4 0.1uF
3.3v
MK CH32V203C8T6
USR K2-3.6×6.1_SMD
USR_BTN
C2 0.1uF
VBAT
TAMPER_RTC
OSC32_IN
OSC32_OUT
OSC_IN
OSC_OUT
RESET
VSSA
VDDA
PA0
PA1
PC13/TAMPER_RTC
PC14/OSC32IN
PC15/OSC32OUT
OSC_IN/PD0
OSC_OUT/PD1
NRST
PA0/WKUP/ADC0
PA1/ADC1
PA2/ADC2
RST K2-3.6×6.1_SMD
R1 10k
C1 0.1uF
C3 0.1uF
VDD_2
VSS_2
PA13/SWDIO
PA12/USB1DP
PA11/USB1DM
PA10
PA9
PA8
PB15
PB14
PB13
PB12
VDD2
VSS2
SWD_DIO
PA12
PA11
RX
TX
PA8
PB15
PB14
PB13
PB12
C5 0.1uF
+5V
ZD1 HT5533SOT89
VIN
VOUT
C10 0.1uF
C9 0.1uF
U1 CH340N
UD+
UD-
RESET
V3
RXD
TXD
RTS#
C7 0.1u
TX
RX
U2 USB_TYPE-C_16
B1A12
A9B4
A8
A5
B7
B5
B8
B6
A7
A6
CC2
SBU2
DP2
DN1
DP1
VBUS
SBU1
CC1
DN2
5,1k R12
R11 5,1k
C11 220uF
J6 HDR-M-2.54_1x2
J7 HDR-M-2.54_1x2
J2 HDR-M-2.54_1x20
J3 HDR-M-2.54_1x20
J4 HDR-M-2.54_1x2
J5 HDR-M-2.54_1x2
32.768 quartz 32.768 kHz
C13 12pF
C14 12pF
U3 XTAL 8MHz
C8 22pF
C12 22pF
J1 HDR-M-2.54_1x5
SWD_DIO
SWD_CLK
RESET
RGB TC5050RGB
R6 1k
R7 1k
R8 1k
RGB_1
RGB_2
RGB_3
C6 0.1uF
VDD_VIO_3
VSS_3
VDD_VIO_1
VSS_1
VDD3
VSS3
PA14/SWCLK
PA15
PB3
PB4
PB5
PB6
PB7
PB8
PB9
PA3/ADC3
PA4/ADC4/DAC0
PA5/ADC5/DAC1
PA6/ADC6
PA7/ADC7
PB0/ADC8
PB1/ADC9
PB2/BOOT1
PB10
PB11
VSS1
VDD1
TITLE: CH32v203c8t6
REV: 1.0
Company: LeidTogi
Sheet: 1/1
Date: 2023-04-07
Drawn By: Ogneyar
嘉立创EDA