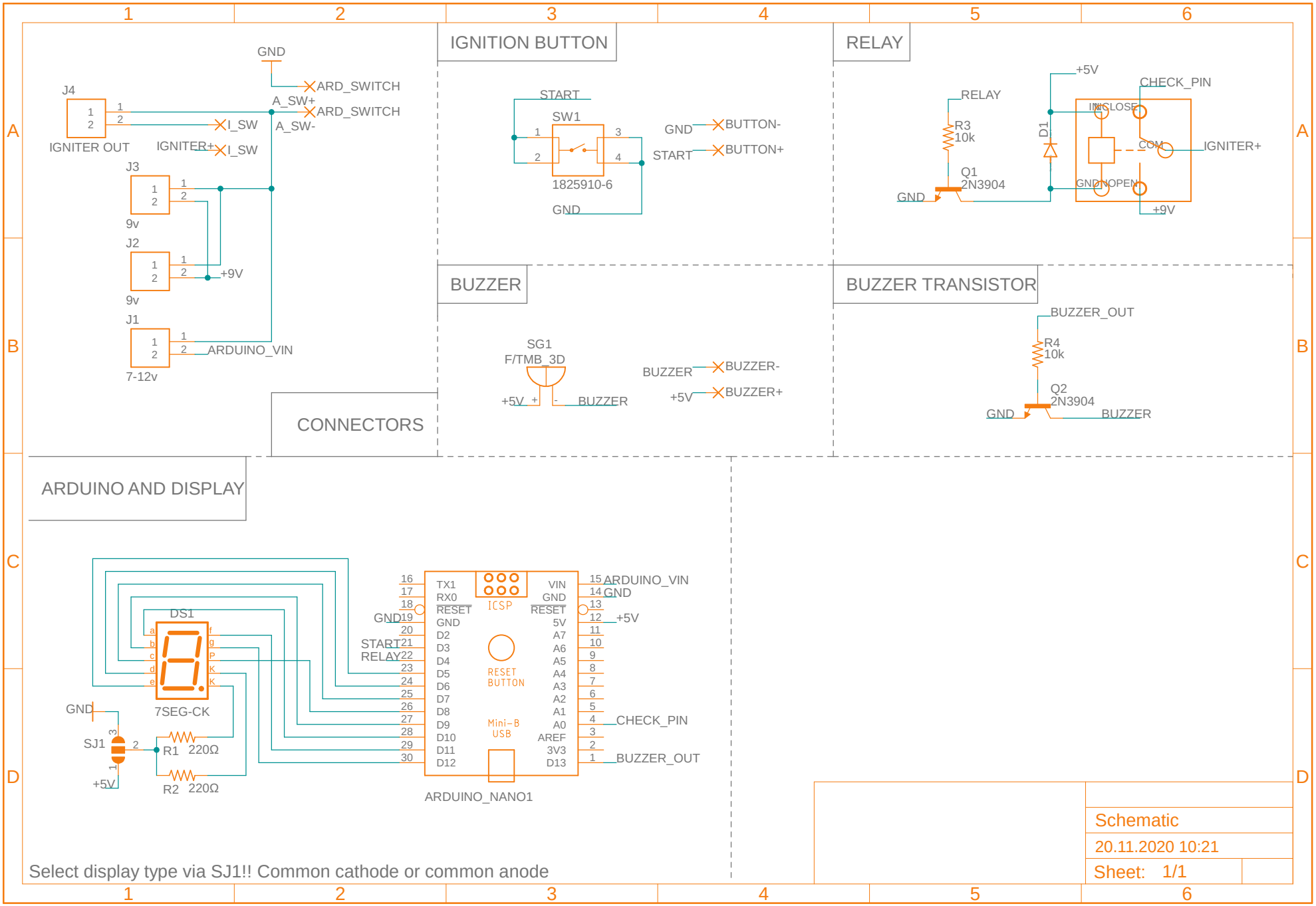
IGNITION BUTTON
RELAY
BUZZER
BUZZER TRANSISTOR
CONNECTORS
ARDUINO AND DISPLAY
GND
ARD_SWITCH
A_SW+
ARD_SWITCH
A_SW-
J4
IGNITER OUT
IGNITER+
I_SW
I_SW
J3
9v
J2
9v
+9V
J1
7-12v
ARDUINO_VIN
START
SW1
1825910-6
GND
GND
BUTTON-
START
BUTTON+
+5V
RELAY
R3
10k
Q1
2N3904
GND
D1
CHECK_PIN
IN/CLOSE
COM
IGNITER+
GND/NOPEN
+9V
SG1
F/TMB_3D
+5V
BUZZER
BUZZER
BUZZER-
+5V
BUZZER+
BUZZER_OUT
R4
10k
Q2
2N3904
GND
BUZZER
DS1
7SEG-CK
GND
SJ1
+5V
R1 220Ω
R2 220Ω
GND
START
RELAY
TX1
RX0
RESET
GND
D2
D3
D4
D5
D6
D7
D8
D9
D10
D11
D12
ICSP
RESET BUTTON
Mini-B USB
VIN
GND
RESET
5V
A7
A6
A5
A4
A3
A2
A1
A0
AREF
3V3
D13
ARDUINO_VIN
GND
+5V
CHECK_PIN
BUZZER_OUT
ARDUINO_NANO1
Select display type via SJ1!! Common cathode or common anode
Schematic
20.11.2020 10:21
Sheet: 1/1