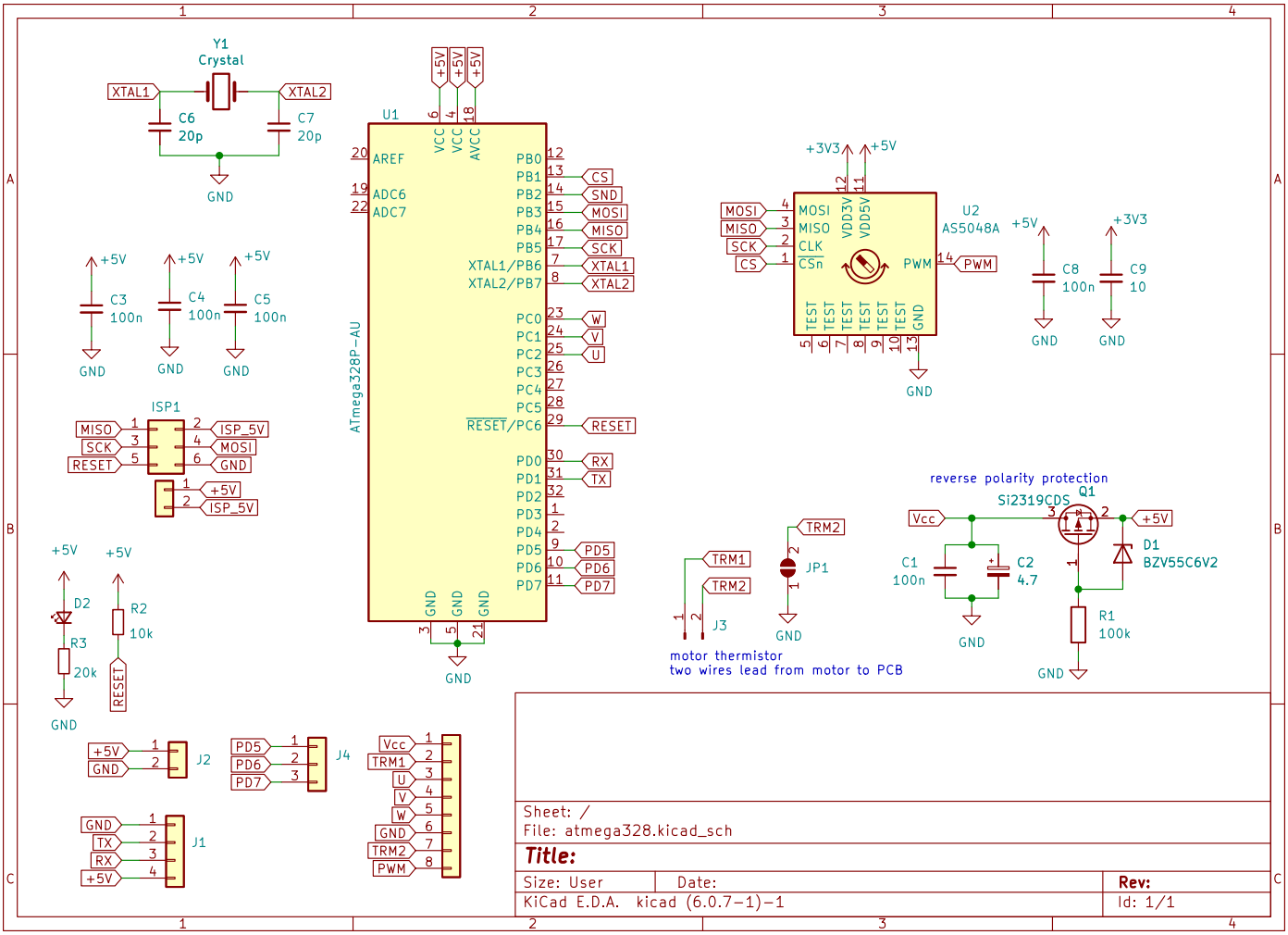
Y1
Crystal
XTAL1
XTAL2
C6
20p
C7
20p
GND
U1
ATmega328P-AU
AREF
ADC6
ADC7
VCC
VCC
AVCC
+5V
PB0
PB1
PB2
PB3
PB4
PB5
XTAL1/PB6
XTAL2/PB7
PC0
PC1
PC2
PC3
PC4
PC5
RESET/PC6
PD0
PD1
PD2
PD3
PD4
PD5
PD6
PD7
CS
SND
MOSI
MISO
SCK
XTAL1
XTAL2
W
V
U
RESET
RX
TX
PD5
PD6
PD7
GND
GND
GND
C3
100n
C4
100n
C5
100n
ISP1
MISO
SCK
RESET
ISP_5V
MOSI
GND
+5V
ISP_5V
D2
R3
20k
R2
10k
RESET
+3V3
+5V
U2
AS5048A
MOSI
MISO
CLK
CSn
VDD3V
VDD5V
PWM
TEST
TEST
TEST
TEST
TEST
TEST
GND
C8
100n
C9
10
TRM1
TRM2
J3
JP1
motor thermistor
two wires lead from motor to PCB
reverse polarity protection
Q1
Si2319CDS
Vcc
C1
100n
C2
4.7
D1
BZV55C6V2
R1
100k
J2
J4
J1
Vcc
TRM1
U
V
W
GND
TRM2
PWM
Sheet: /
File: atmega328.kicad_sch
Title:
Size: User
Date:
Rev:
KiCad E.D.A. kicad (6.0.7-1)-1
Id: 1/1