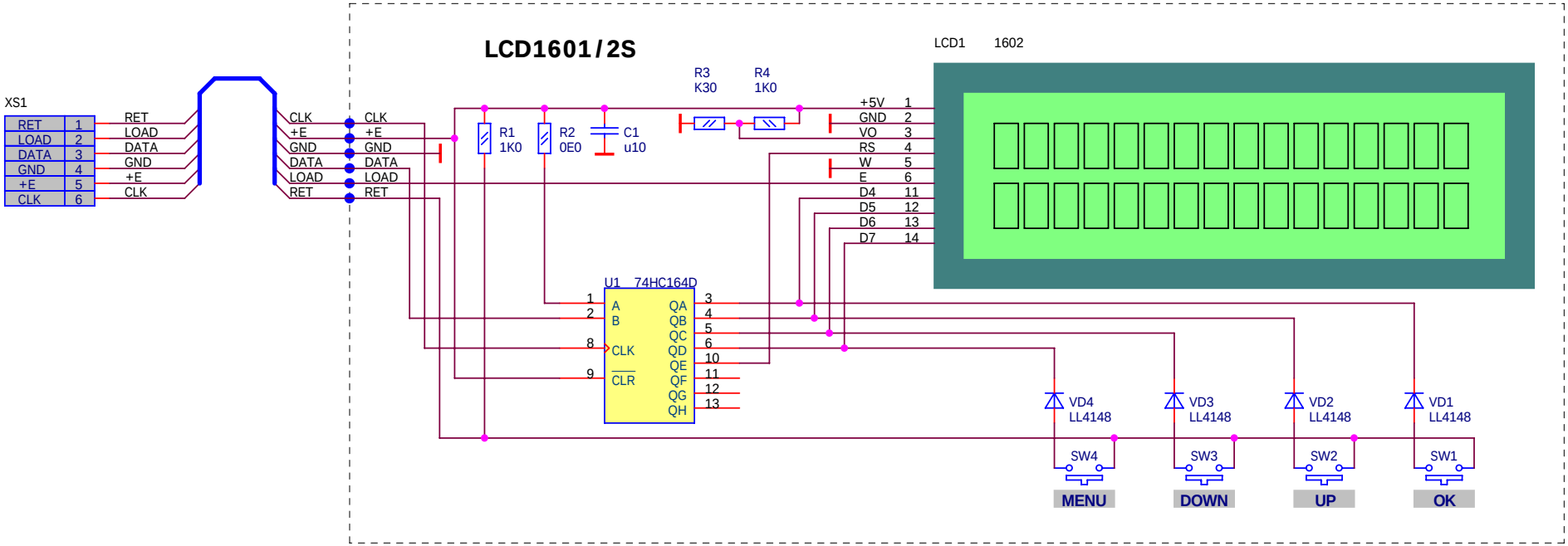

NSM lab

Title	FREQUENCY COUNTER FC-510 (1601 display board)	
Size	Document Number	Rev
Date: Thursday, March 05, 2015	Sheet 2 of 6	