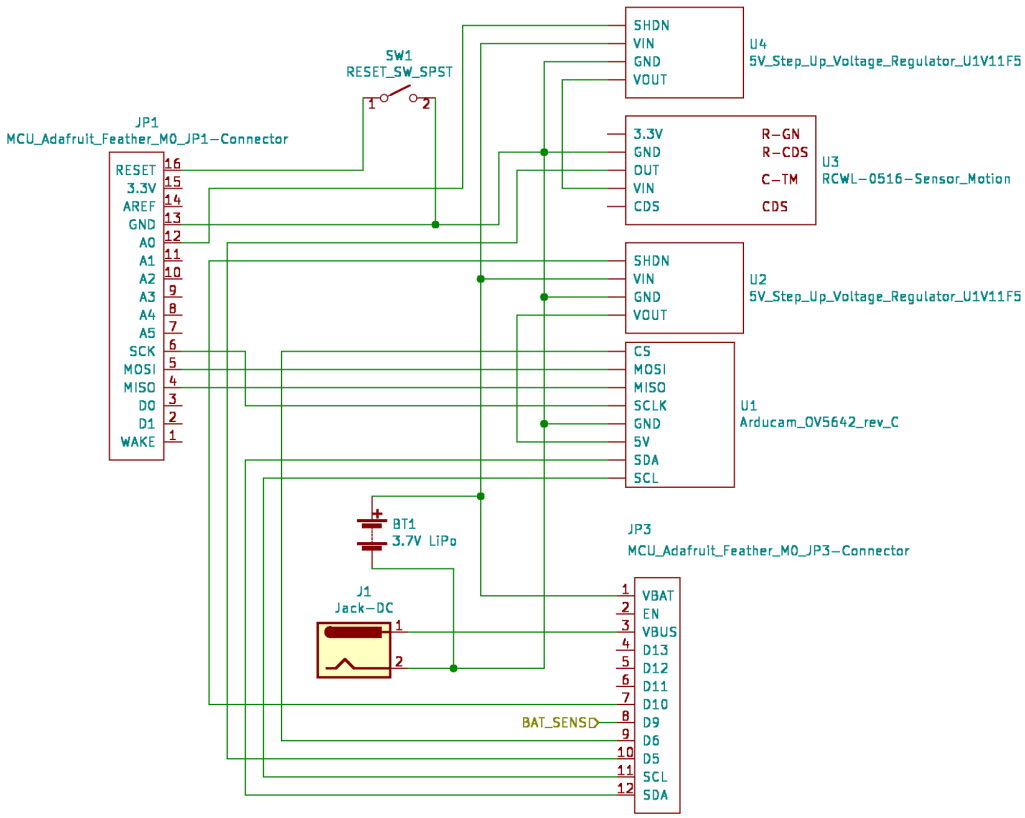

Drawn by: Patrick K. Moffitt
Adafruit Feather M0 WiFi – ATSAMD21 + ATWINC1500
Arducam OV5642 5MP Camera, RCWL-0516, Pololu #2562
This schematic is in the public domain.

Sheet: /
File: 5MP_Motion_Camera.sch

Title: 5 Mega-Pixel Motion Camera

Size: USLetter	Date: 2020-06-12	**Rev: 1.2**
KiCad E.D.A. eeschema 5.1.6-c6e7f7d86ubuntu18.04.1		Id: 1/1