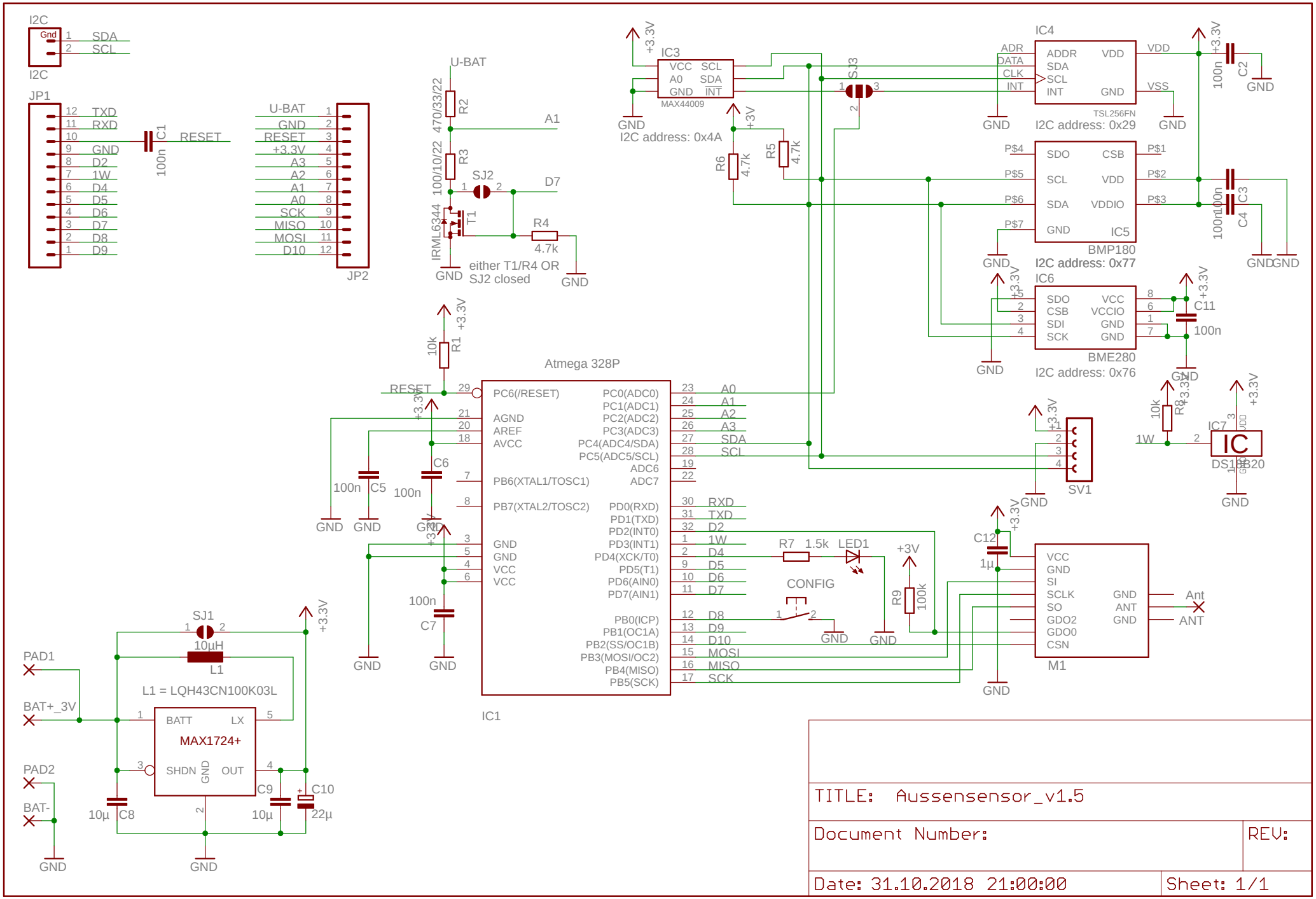

28.05.2019 21:54:30 f=1.03 D:\Daten\Peter\Projekt\FHEM\Sensor\HomeMatic\Universalsensor\PCB\Aussensensor_v1.5.sch (Sheet: 1/1)