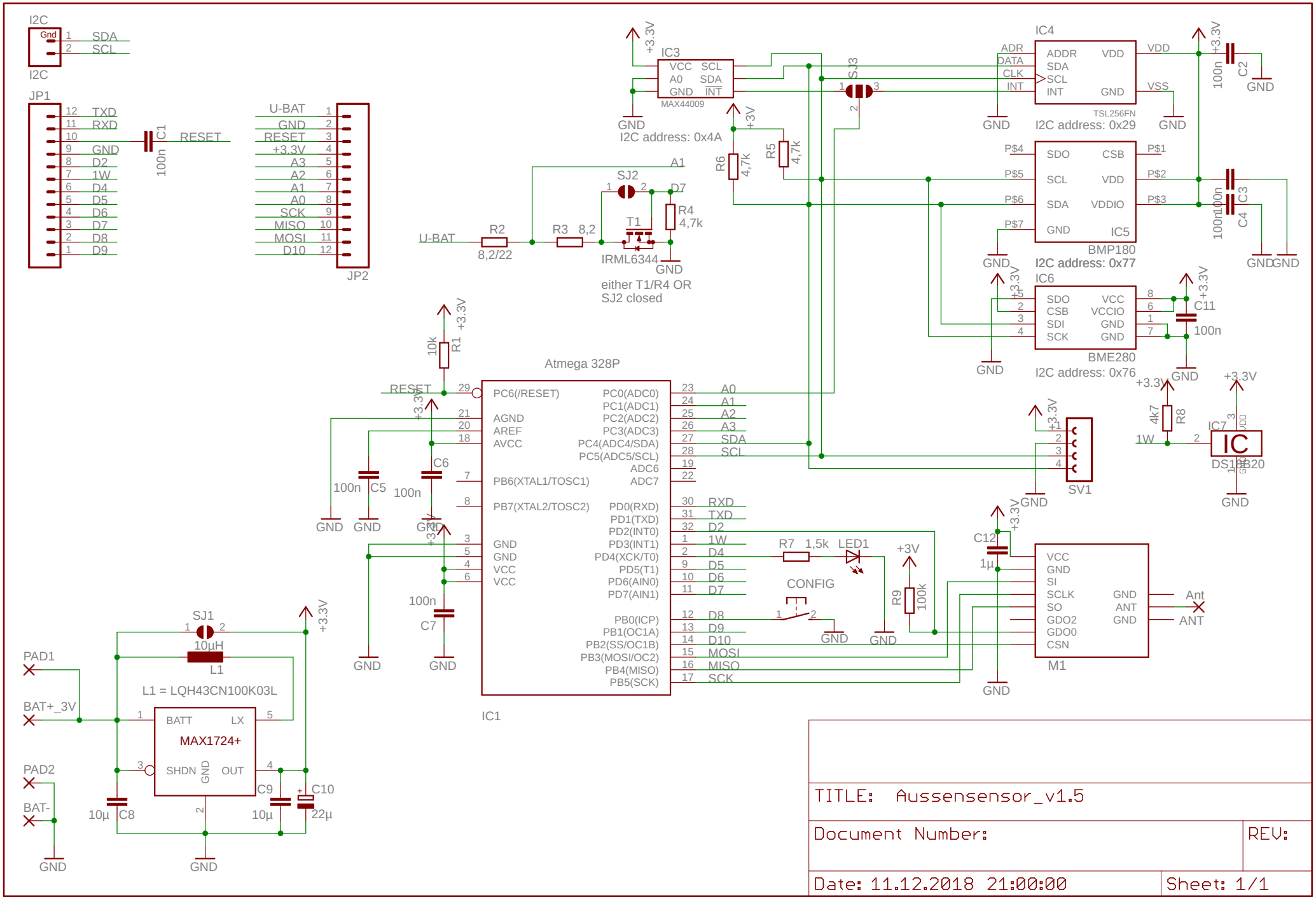

TITLE: Aussensensor_v1.5

Document Number:

REV:

Date: 11.12.2018 21:00:00

Sheet: 1/1

11.12.2018 21:19:50 f=1.03 D:\Daten\Peter\Projekt\FHEM\Sensor\HomeMatic\Universalsensor\PCB\Aussensensor_v1.5.sch (Sheet: 1/1)