Neopixel Control PCB

PG 02/22/2020

Teensy 3.2:

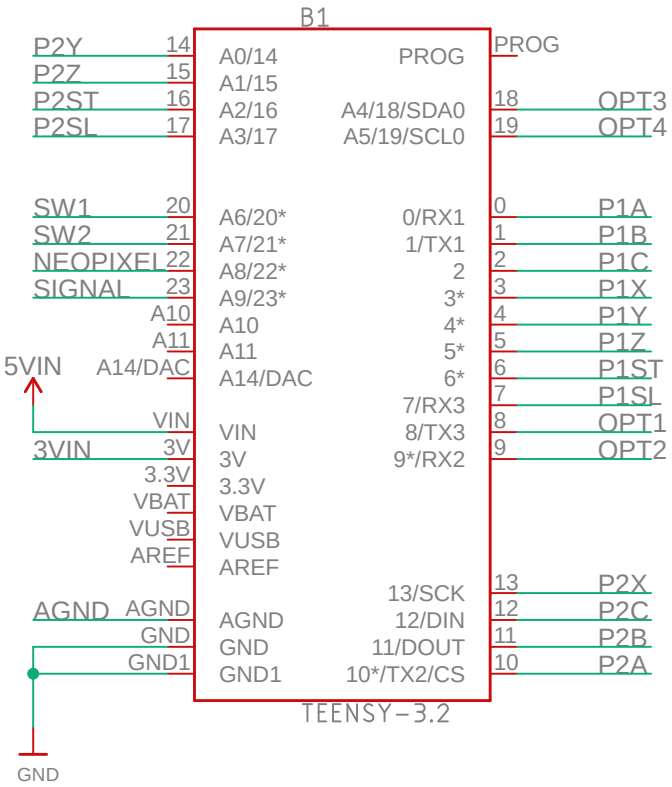

Switch Headers:

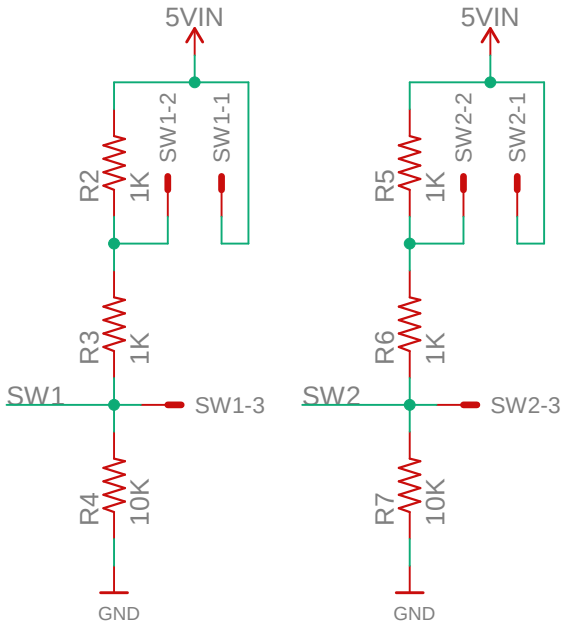

Microphone Header:

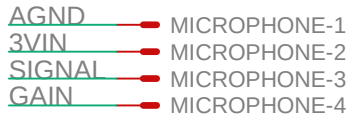

Microphone Gain Jumper:

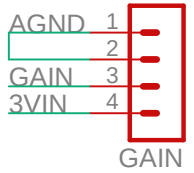

Power Headers:

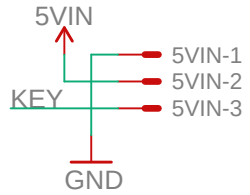

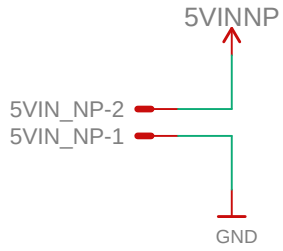

Button Intercept Headers:

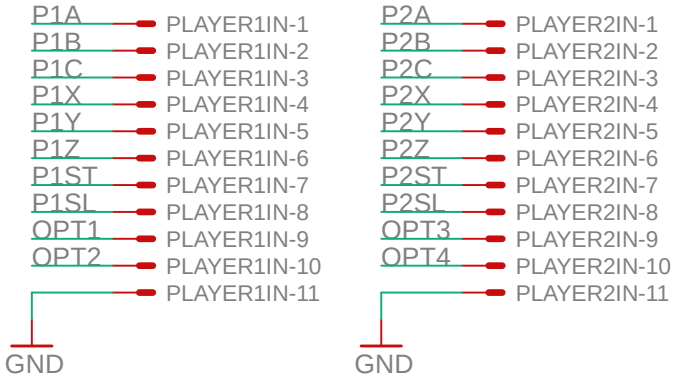

Neopixel:

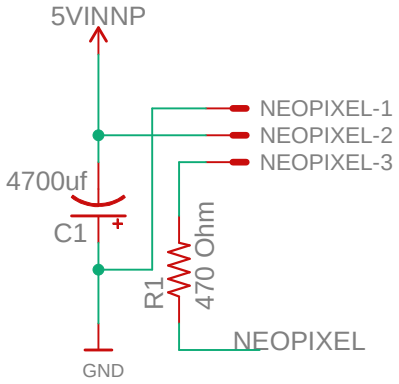

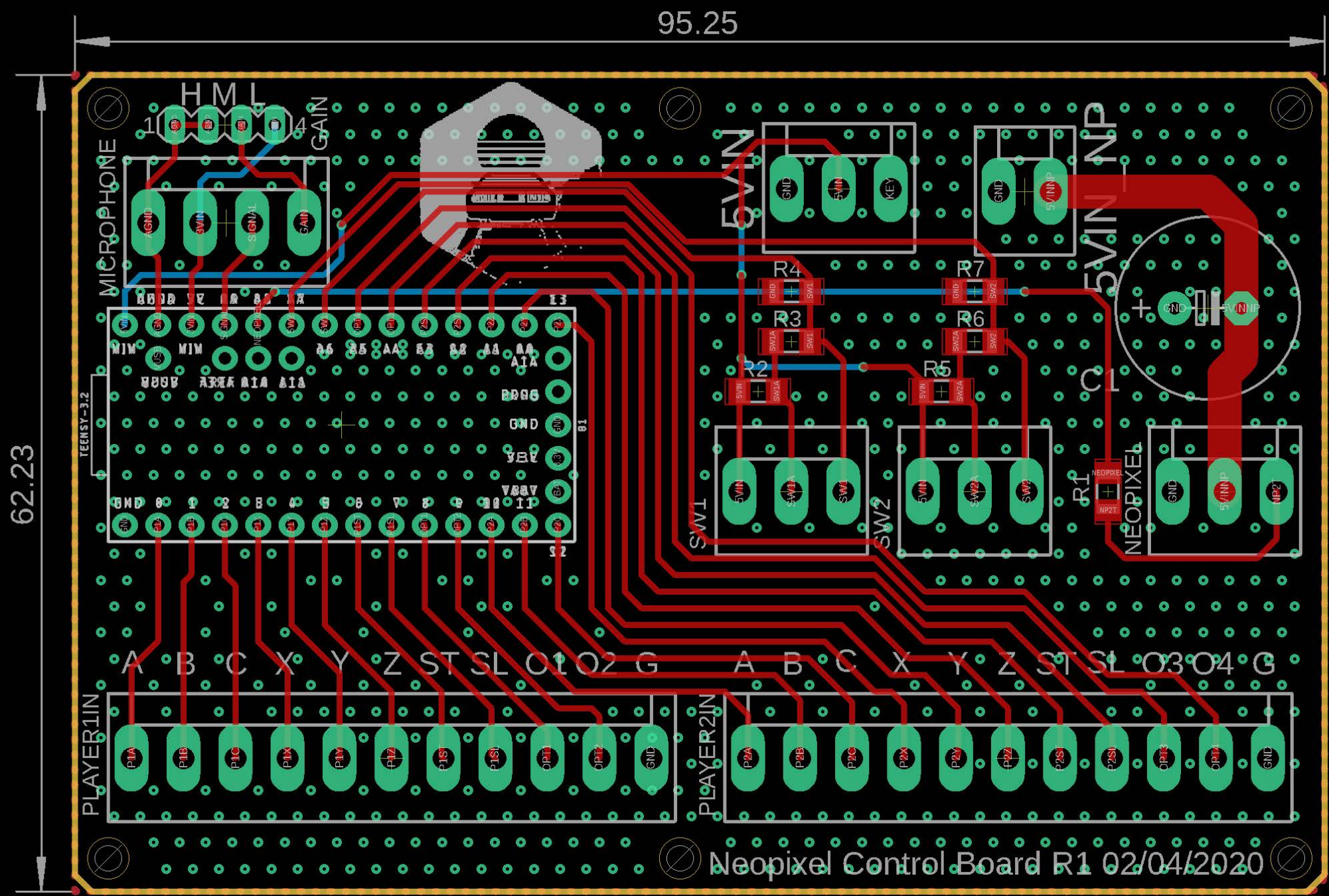
95.25
62.23
H M L
GAIN
MICROPHONE
5VIN
5VINNP
R4
R7
R3
R6
R2
R5
C1
R1
NEOPIXEL
SW1
SW2
TEENSY-3.2
A B C X Y Z ST SL O1 O2 G
A B C X Y Z ST SL O3 O4 G
PLAYER1IN
PLAYER2IN
Neopixel Control Board R1 02/04/2020

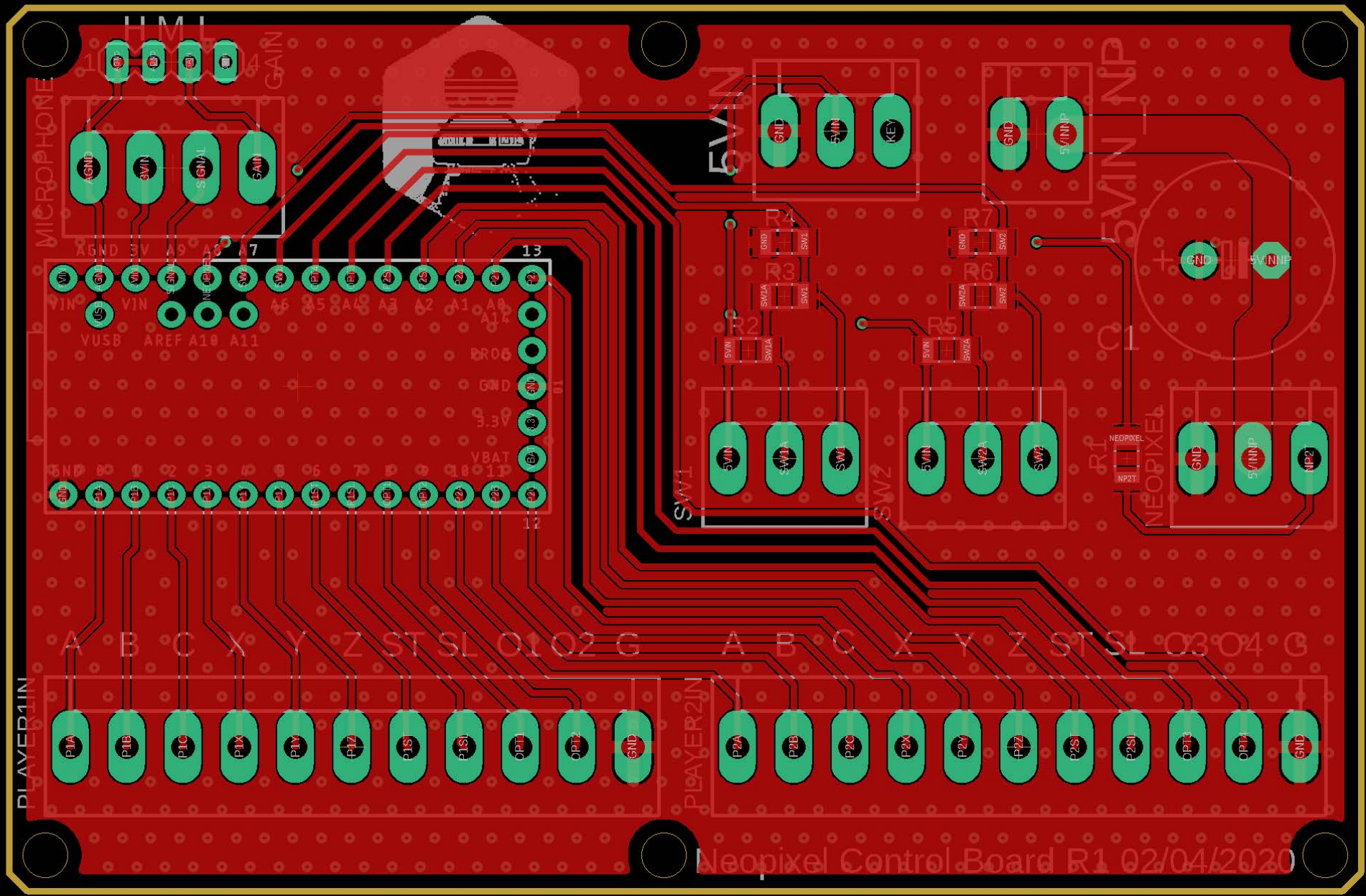
HMI
MICROPHONE
GAIN
AGND
5VIN
SIGNAL
GAIN
5VIN
GND
5VIN
KEY
GND
5VINNP
5VINNP
R4
R7
R3
R6
R2
R5
C1
GND
5VINNP
NEOPIXEL
NP2T
R1
5VIN
SW1A
SW1
5VIN
SW2A
SW2
SW1
SW2
A B C X Y Z ST SL O1 O2 G
A B C X Y Z ST SL O3 O4 G
PLAYER1IN
PLAYER2IN
P1A P1B P1C P1X P1Y P1Z P1ST P1SL OPT1 OPT2 GND
P2A P2B P2C P2X P2Y P2Z P2ST P2SL OPT3 OPT4 GND
Neopixel Control Board R1 02/04/2020

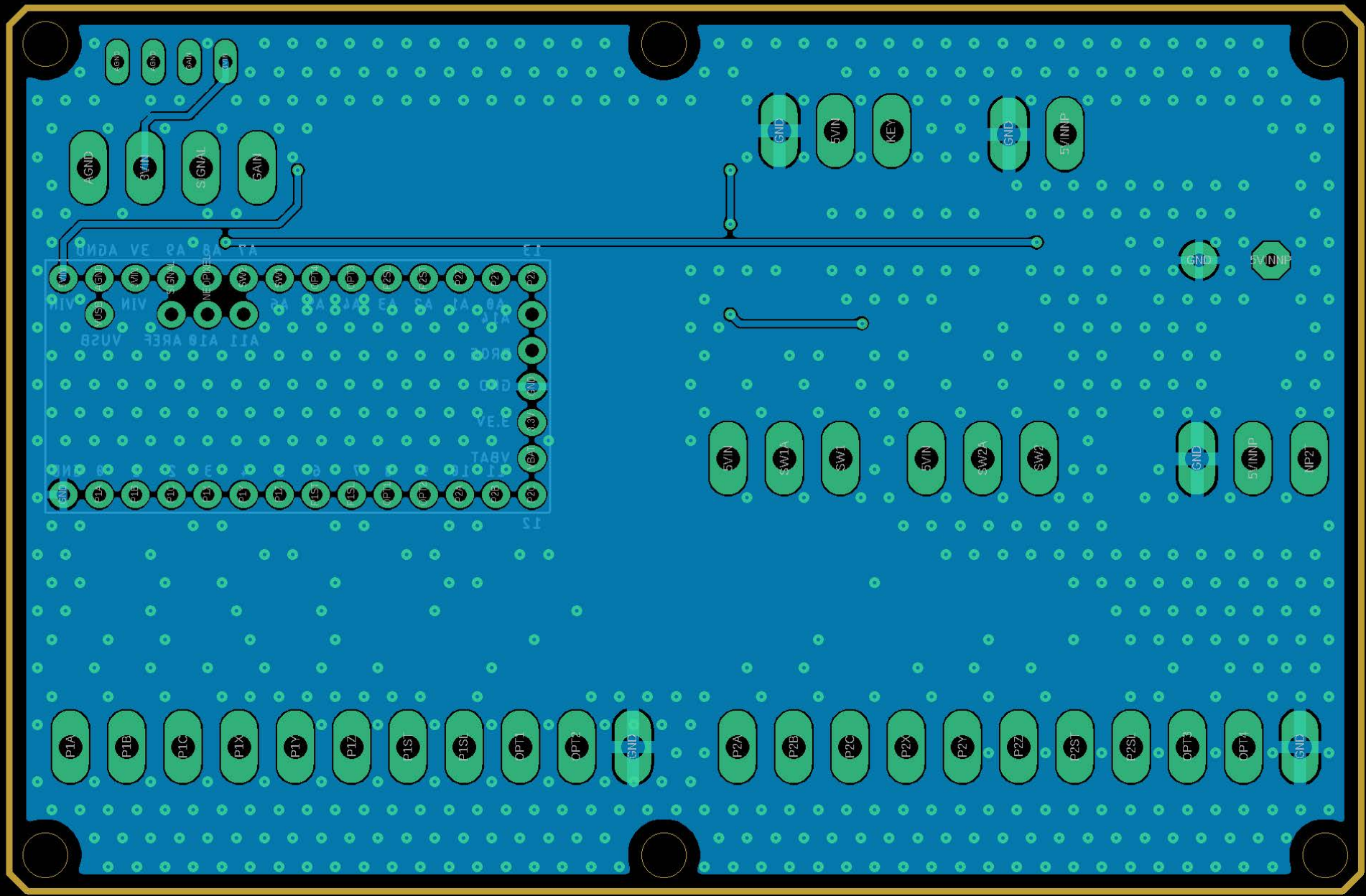
GND
GND
GND
5VIN
AGND
5VIN
SIGNAL
GAIN
GND
5VIN
KEY
GND
5VINP
GND
5VINP
5VIN
SW1
SW1
5VIN
SW2
SW2
GND
5VINP
VP2
P1A
P1B
P1C
P1X
P1Y
P1Z
P1S
P1S
OPT
OPT
GND
P2A
P2B
P2C
P2X
P2Y
P2Z
P2S
P2S
OPT
OPT
GND