Raspberry Pi Switch Mini-Hat

PG 2/22/2020

Raspberry Pi Header (2x6)

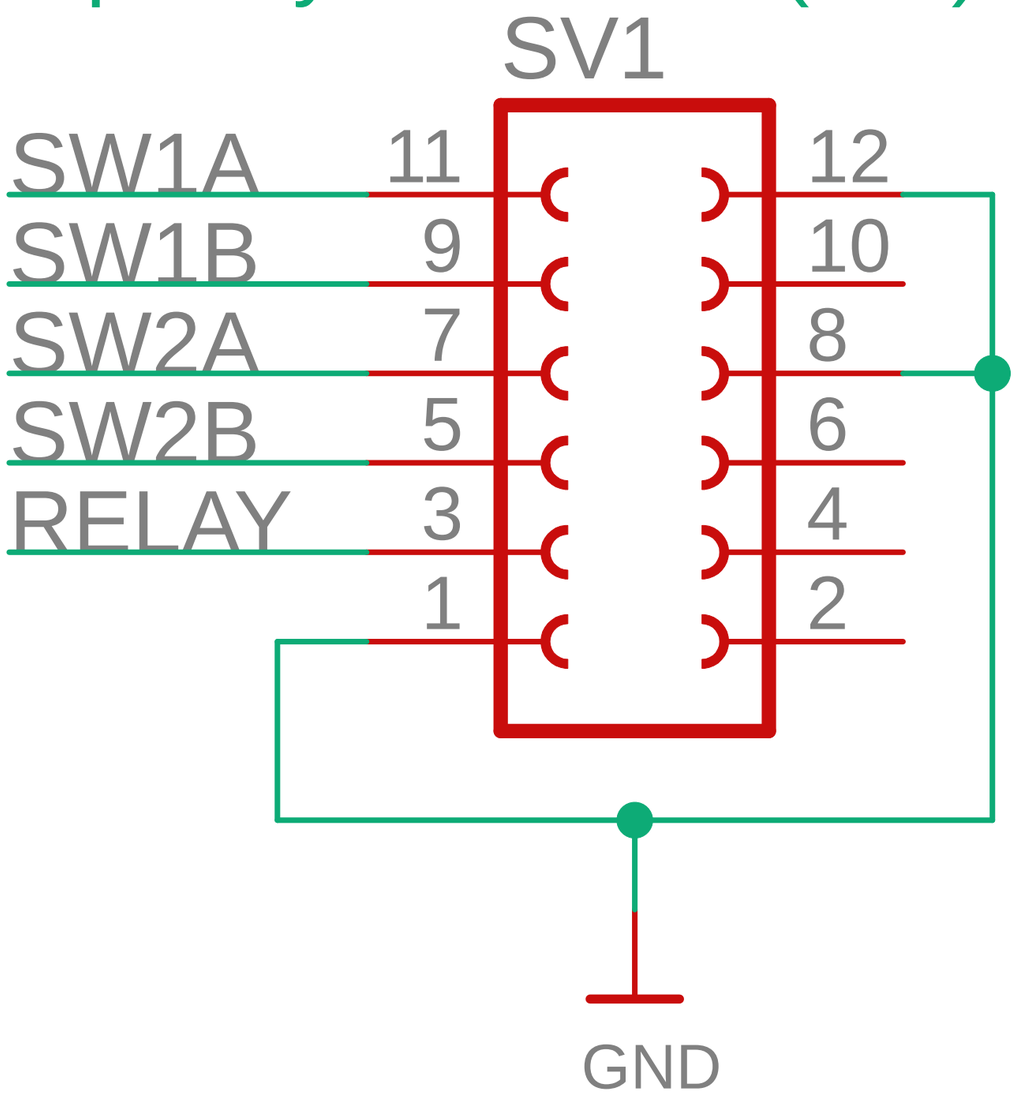

Switch Headers:

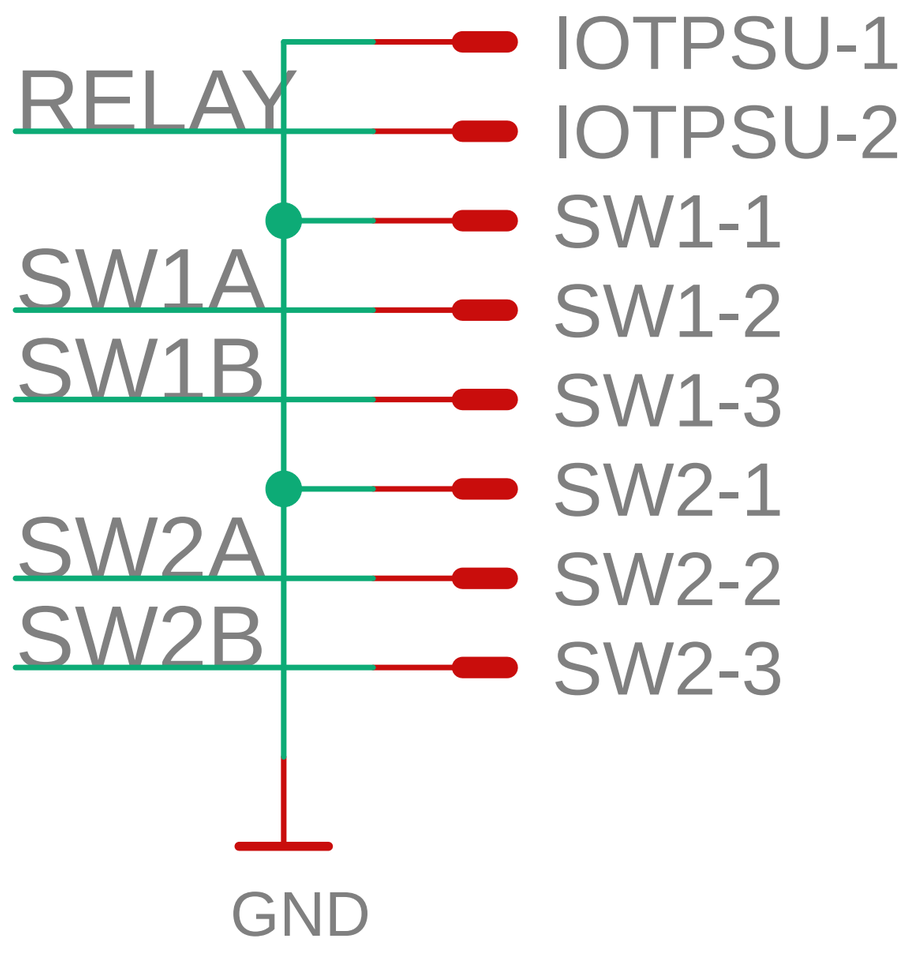

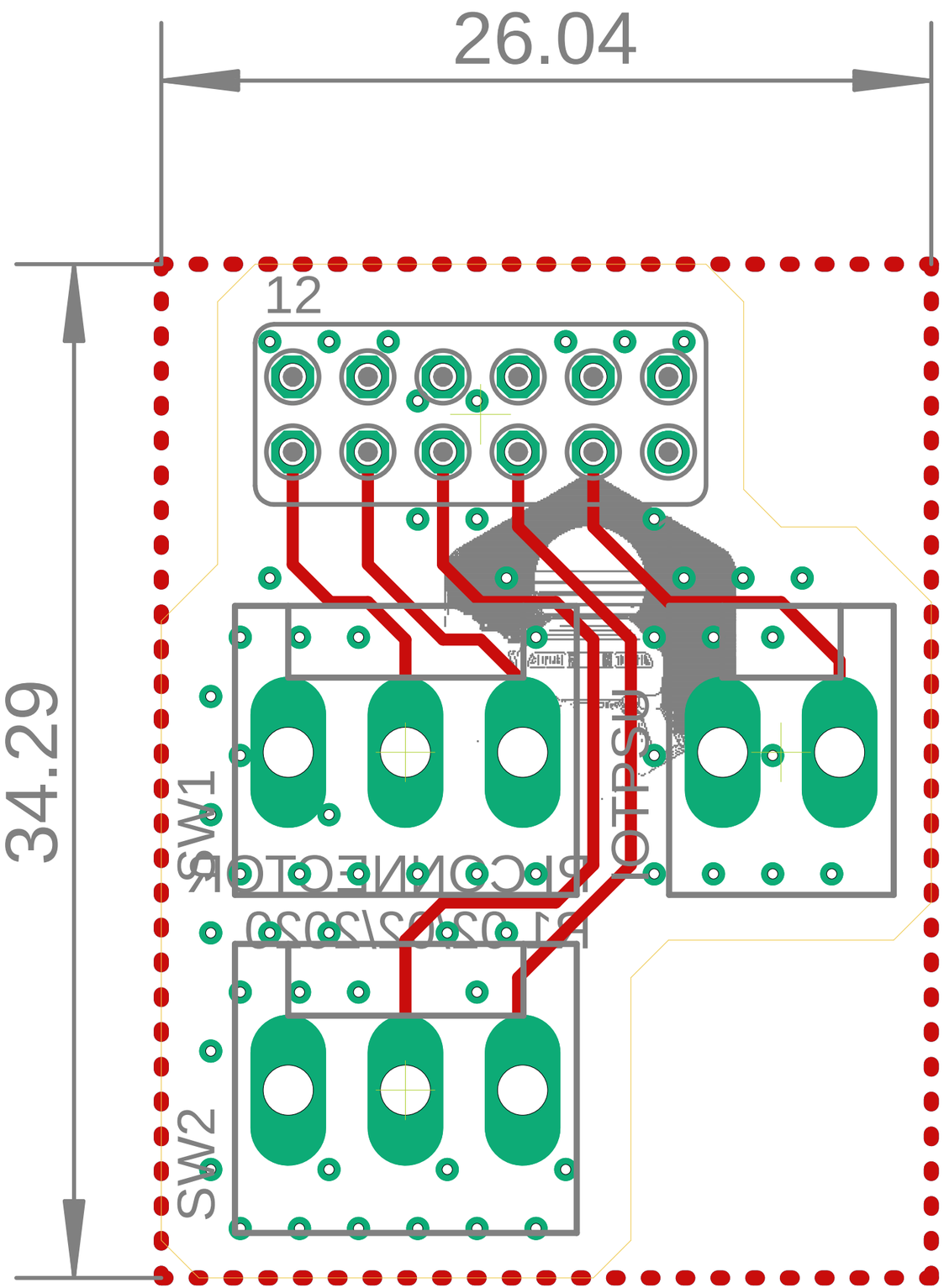
26.04
34.29
12
SW1
SW2
RECONNECTOR
P1 02/02/2020
IOTPSU

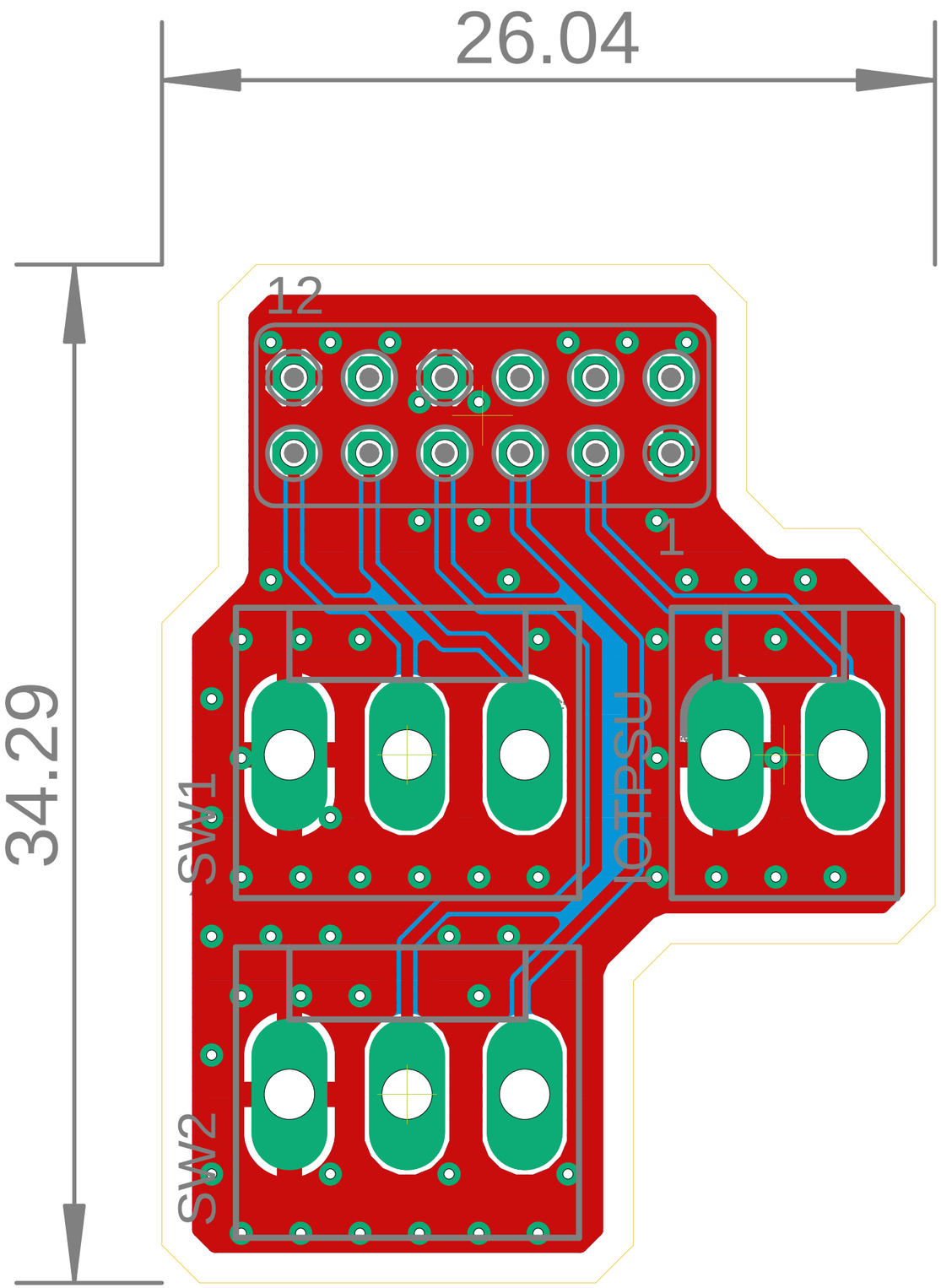
26.04
34.29
12
1
SW1
SW2
OTPSU

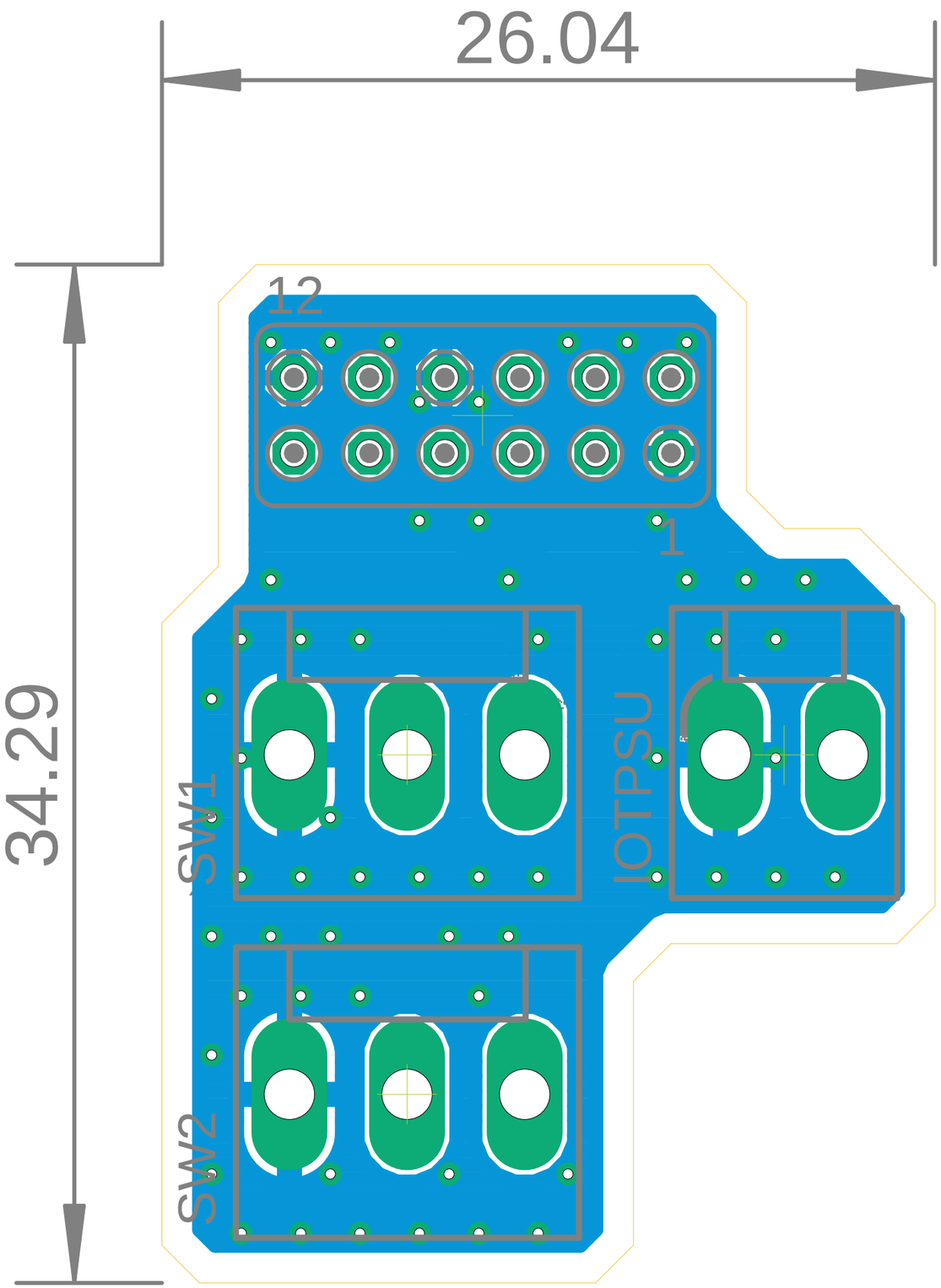
26.04
34.29
12
1
SW1
IOTPSU
SW2