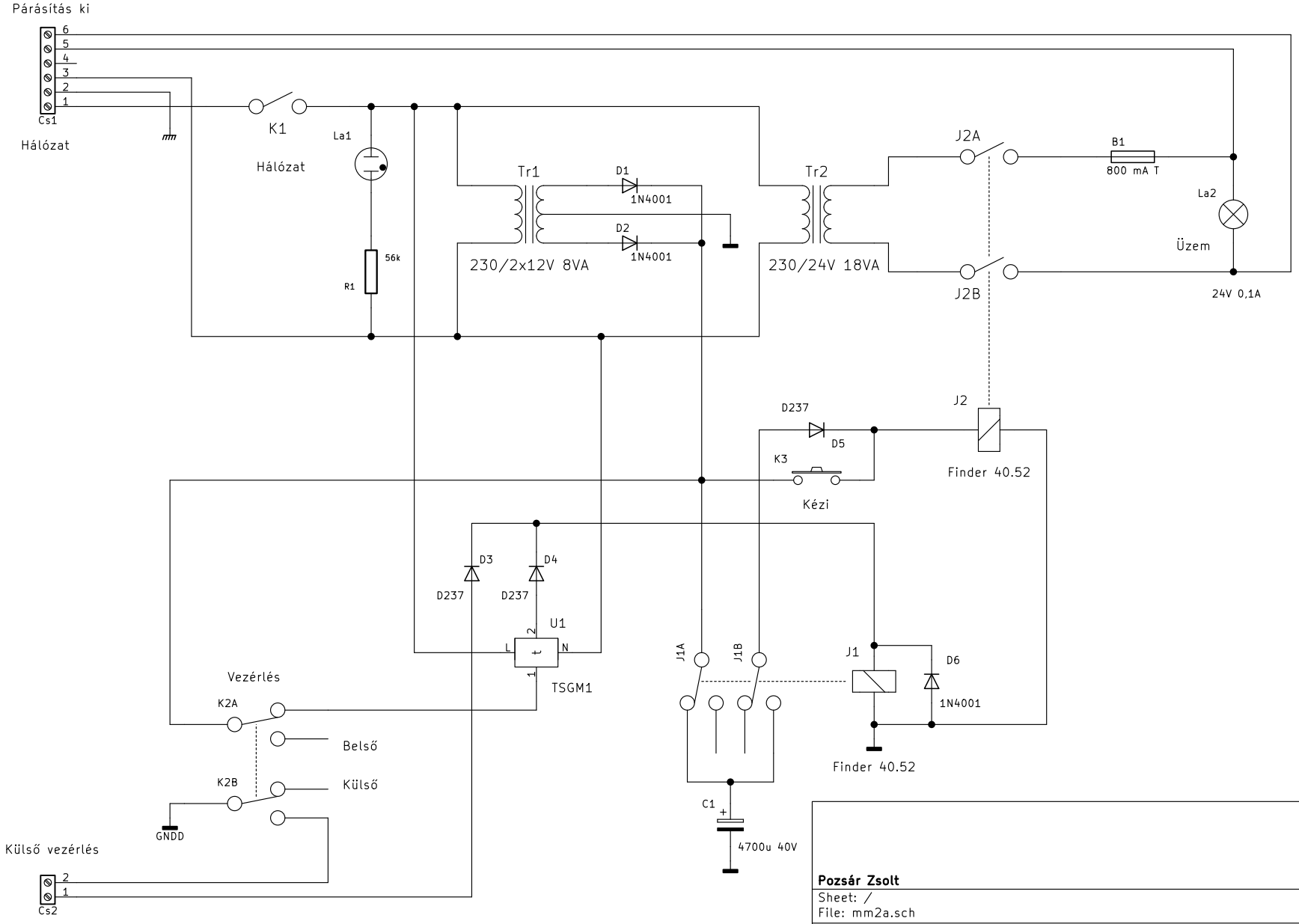

Pozsár Zsolt

Sheet: /

File: mm2a.sch

Title: MM2A gombatermeszto automatika

Size: A4	Date: 10 dec 2017	**Rev: 1.0**
KiCad E.D.A. kicad 4.0.7		Id: 1/1