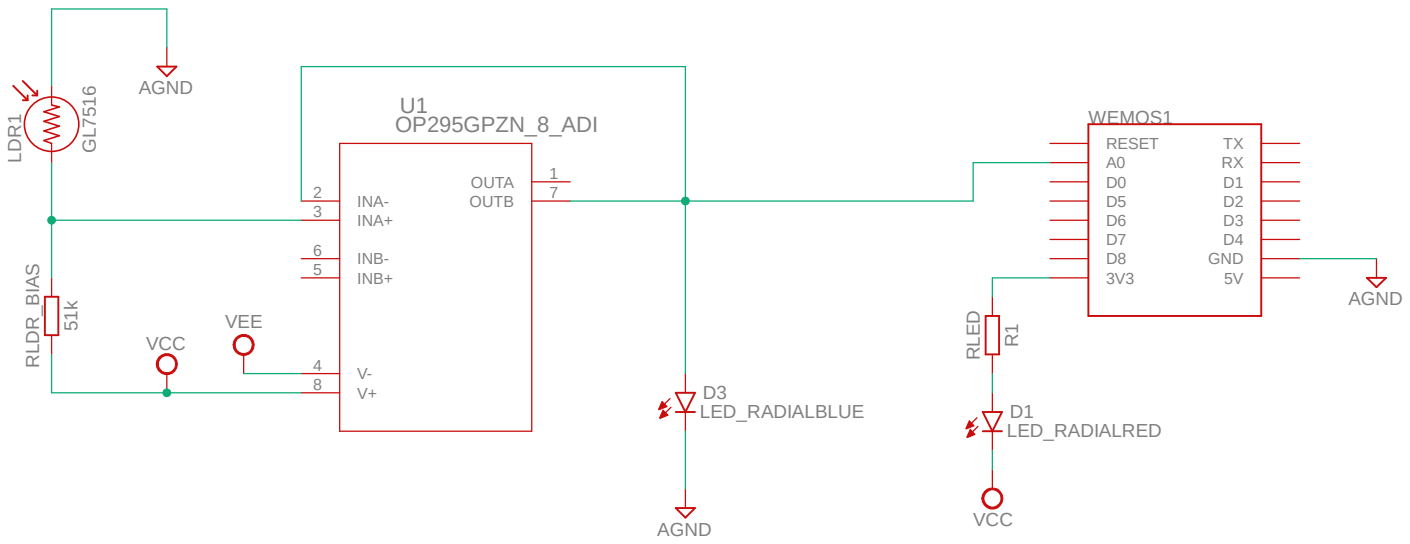
LDR1
GL7516
AGND
U1
OP295GPZN_8_ADI
INA-
INA+
INB-
INB+
OUTA
OUTB
V-
V+
RLDR_BIAS
51k
VCC
VEE
D3
LED_RADIALBLUE
AGND
WEMOS1
RESET
A0
D0
D5
D6
D7
D8
3V3
TX
RX
D1
D2
D3
D4
GND
5V
AGND
RLED
R1
D1
LED_RADIALRED
VCC

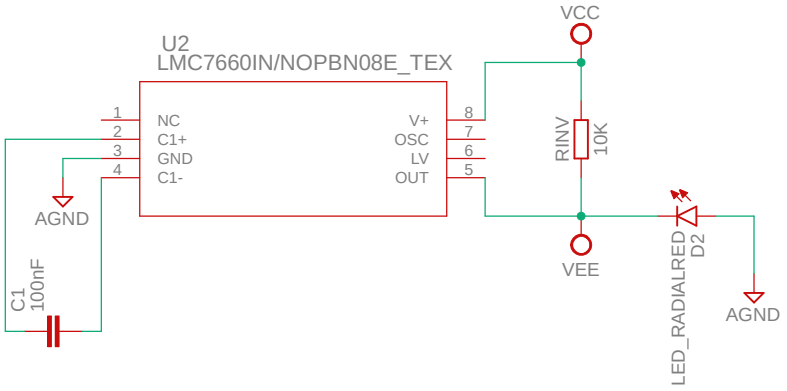
U2
LMC7660IN/NOPBN08E_TEX
NC
C1+
GND
C1-
V+
OSC
LV
OUT
AGND
C1
100nF
VCC
RINV
10K
VEE
LED_RADIALRED
D2
AGND