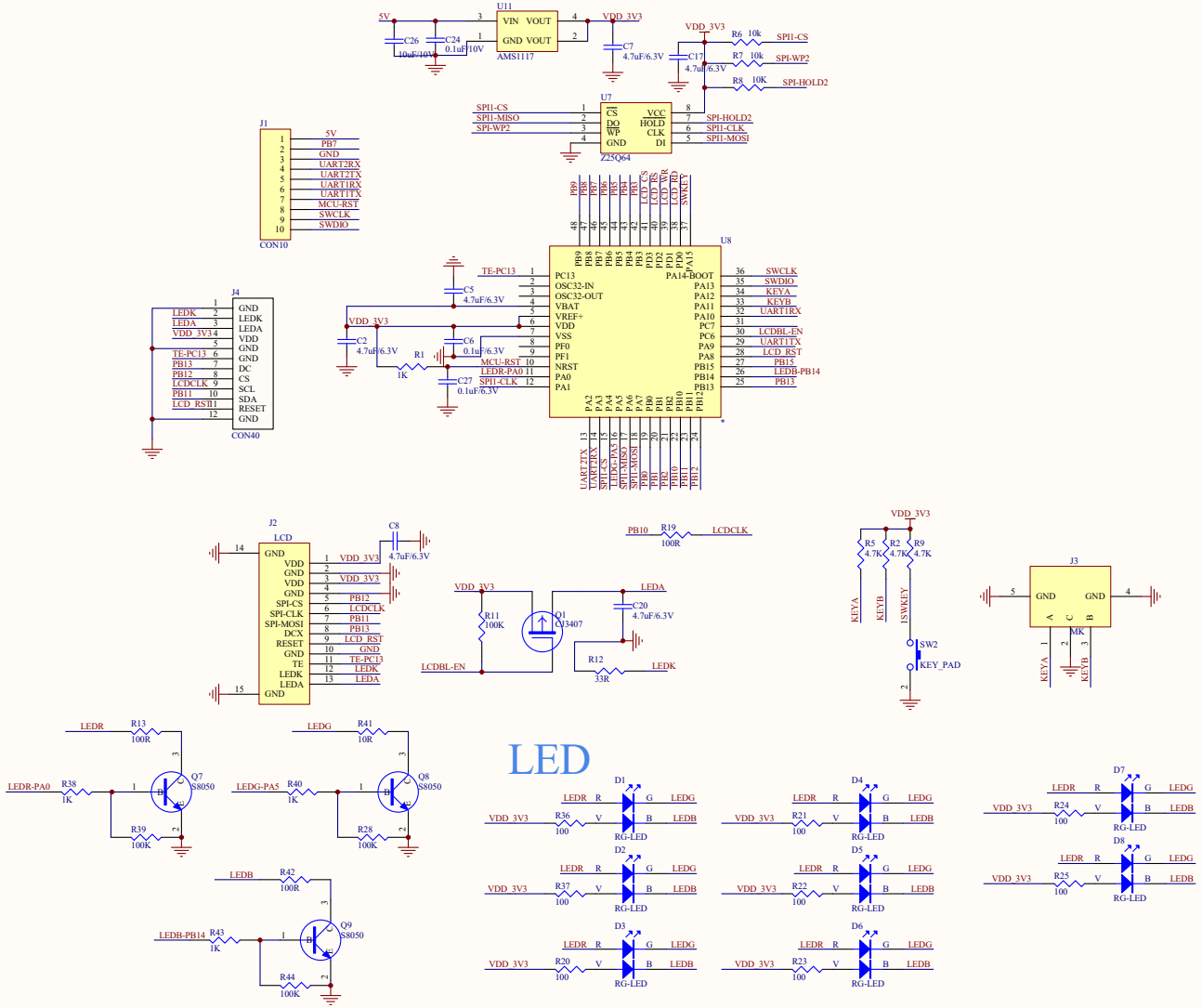

Drawn by =DrawnBy	Revisi
Check by =CheckedBy	Engine
Size A2	Date

website: https://www.bluexmicro