Target Stack Shield

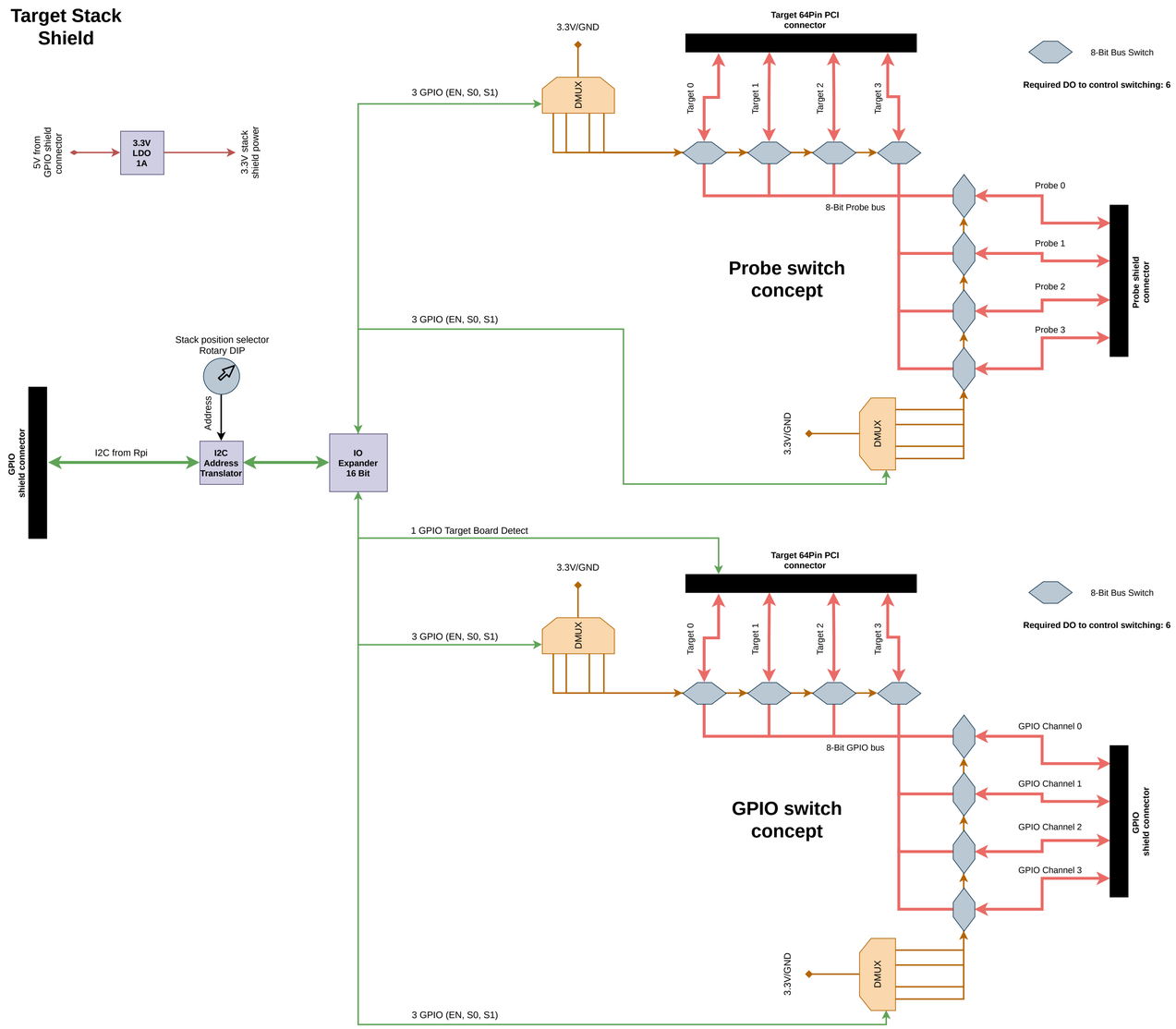

Raspberry 40pin connector config bcm2711

Per GPIO channel: 4x GPIO, 1x UART

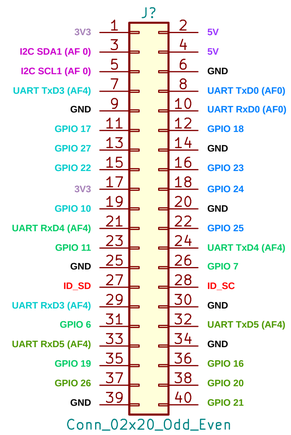

I2C Bus: Controls all IO expanders on Target Stack Shields

3V3: Unused

5V: Power source for shields

ID_XX: Unused

GPIO Channels:

- Channel 0
- Channel 1
- Channel 2
- Channel 3