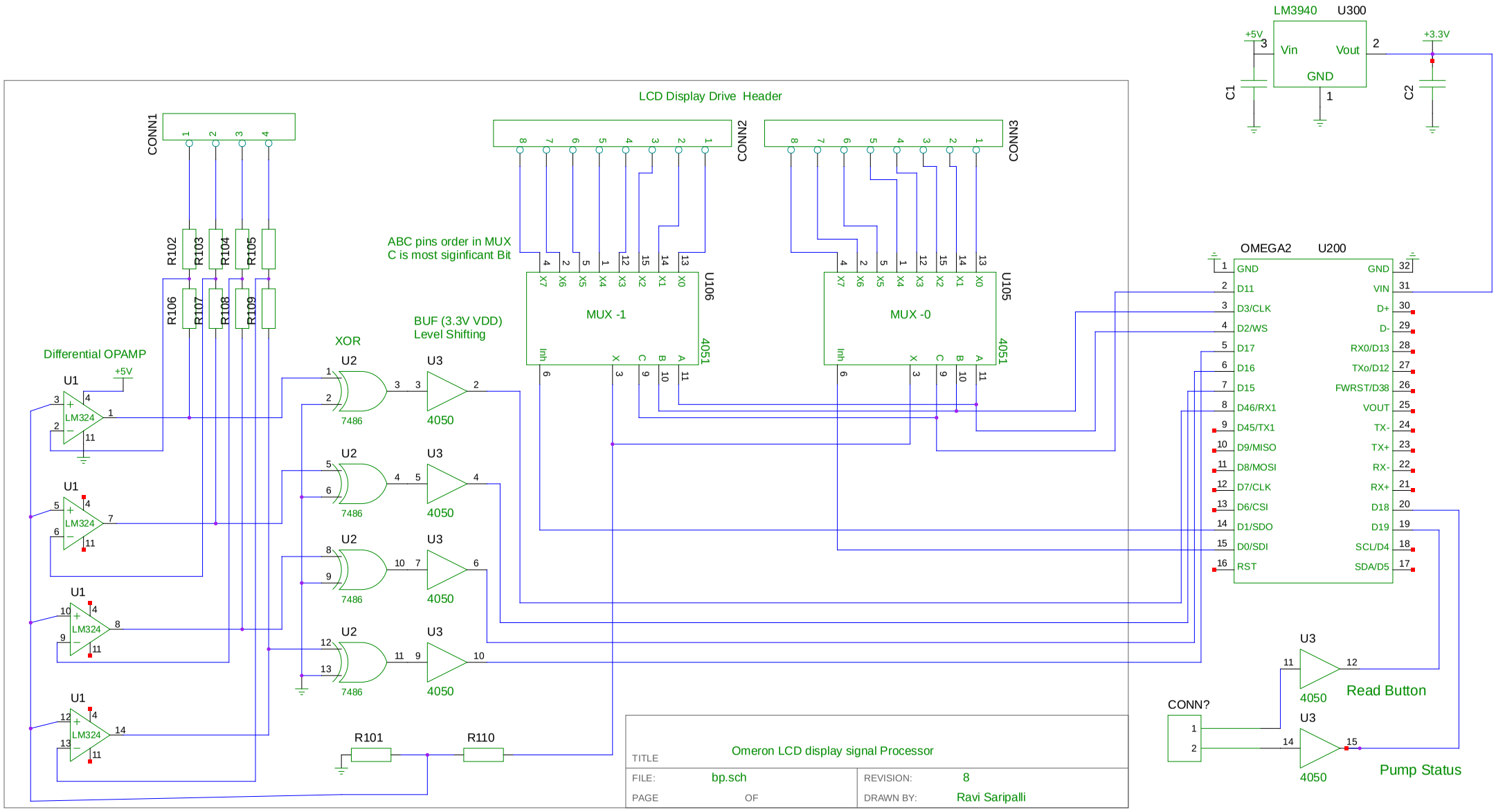

U1 - C0 and Segment Signal Summer

U2 - Convert to digital signal with XOR
(why XOR ... just because we had it)

U3 - Using CMOS buffer (3.3v) to shift
digital signal level to 3.3v