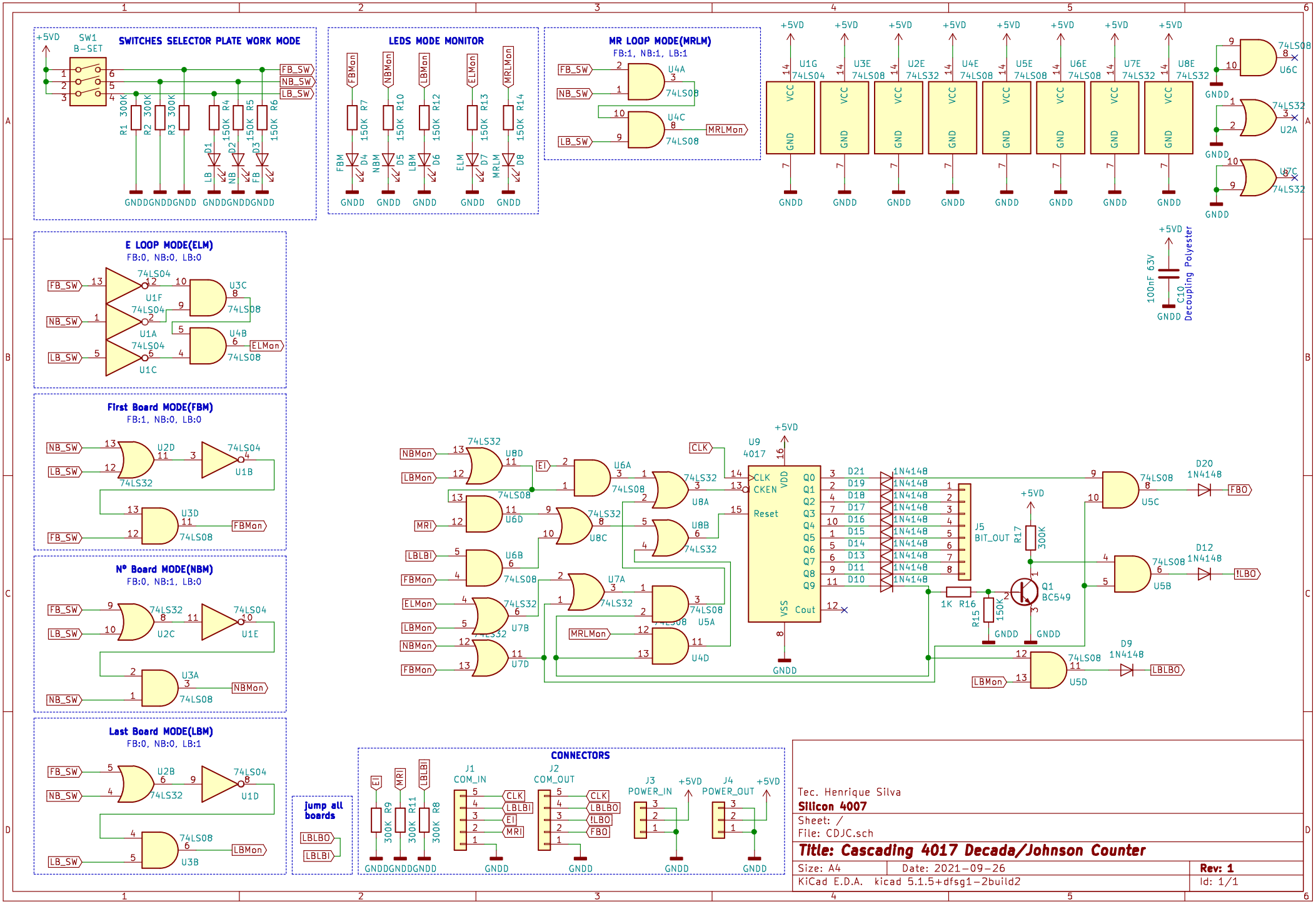

Tec. Henrique Silva

Silicon 4007

Sheet: /

File: CDJC.sch

Title: Cascading 4017 Decada/Johnson Counter

Size: A4	Date: 2021-09-26	Rev: 1
KiCad E.D.A. kicad 5.1.5+dfsg1-2build2		Id: 1/1