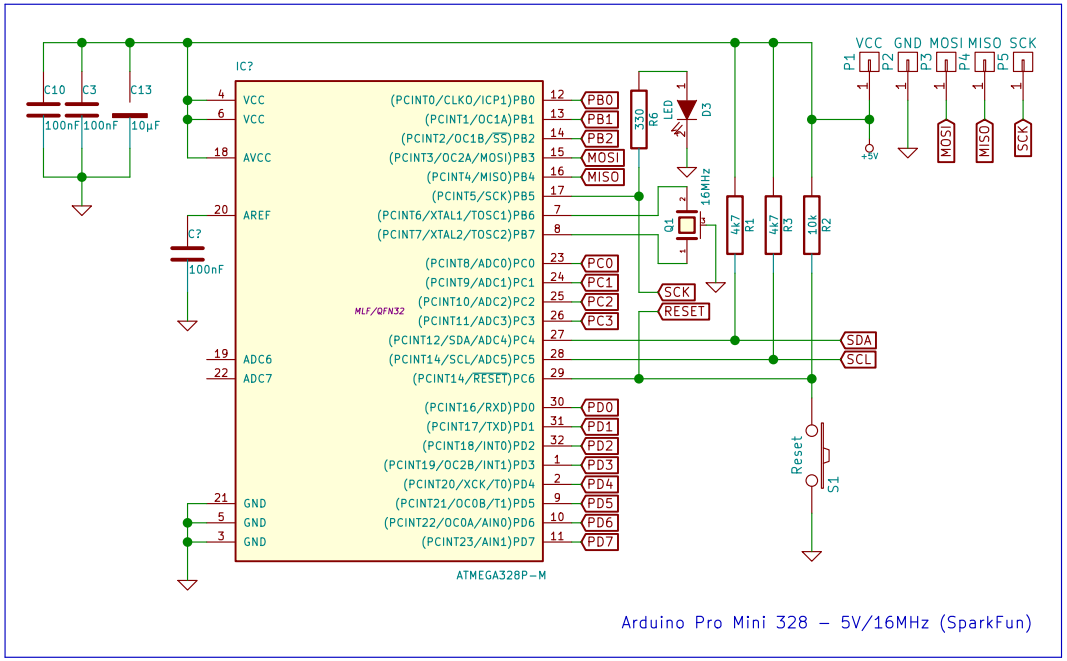

Arduino Pro Mini 328 – 5V/16MHz (SparkFun)

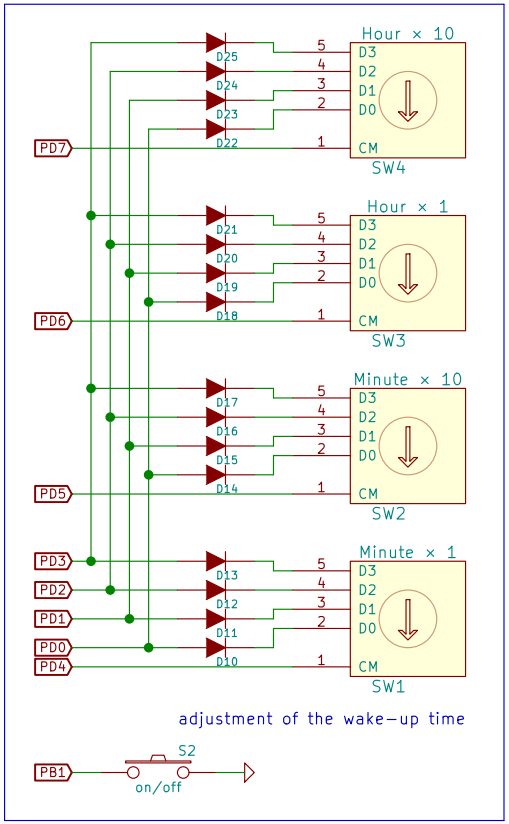

adjustment of the wake-up time

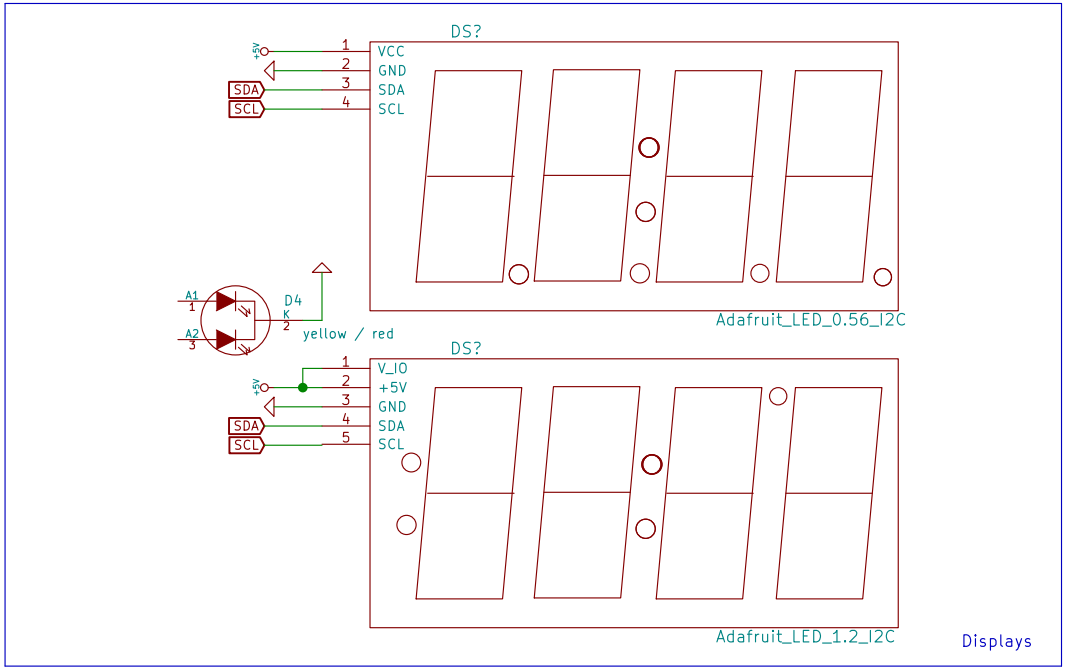

Displays

Rolf Niepraschk

Sheet: /

File: LEDuhr.sch

Title: LED-DCF77-Wecker

Size: A4	Date: 16 Sep 2014	Rev:
KiCad E.D.A. kicad (20140918 BZR5141)-product		Id: 1/1