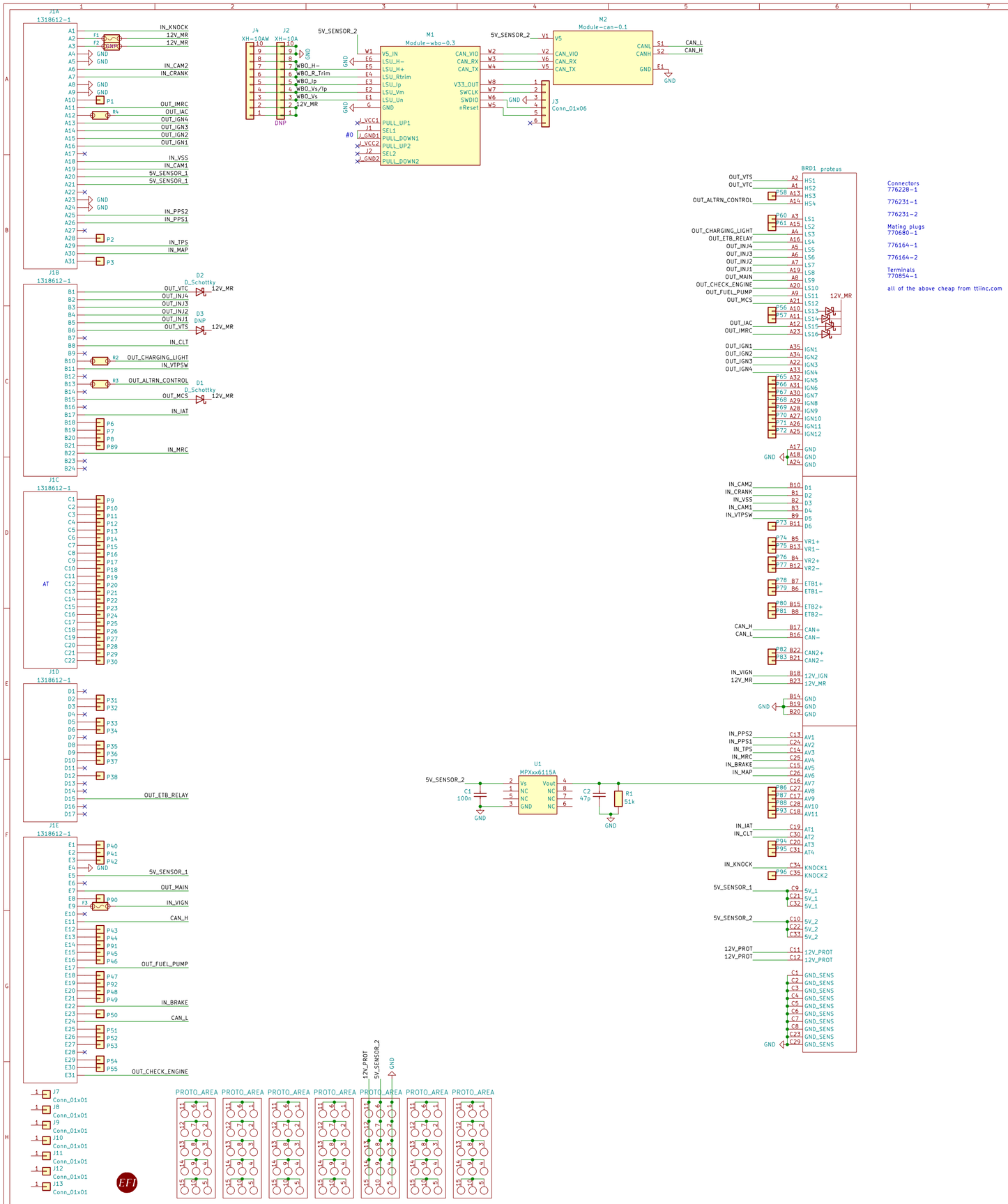

rusEFI
Sheet: /
File: proteus125honda.kicad_sch

Title: proteus125honda

Size: A2 Date: 2021-09-22	Rev: a
KiCad E.D.A. kicad (5.99.0-12439-g94954386e6)	Id: 1/1

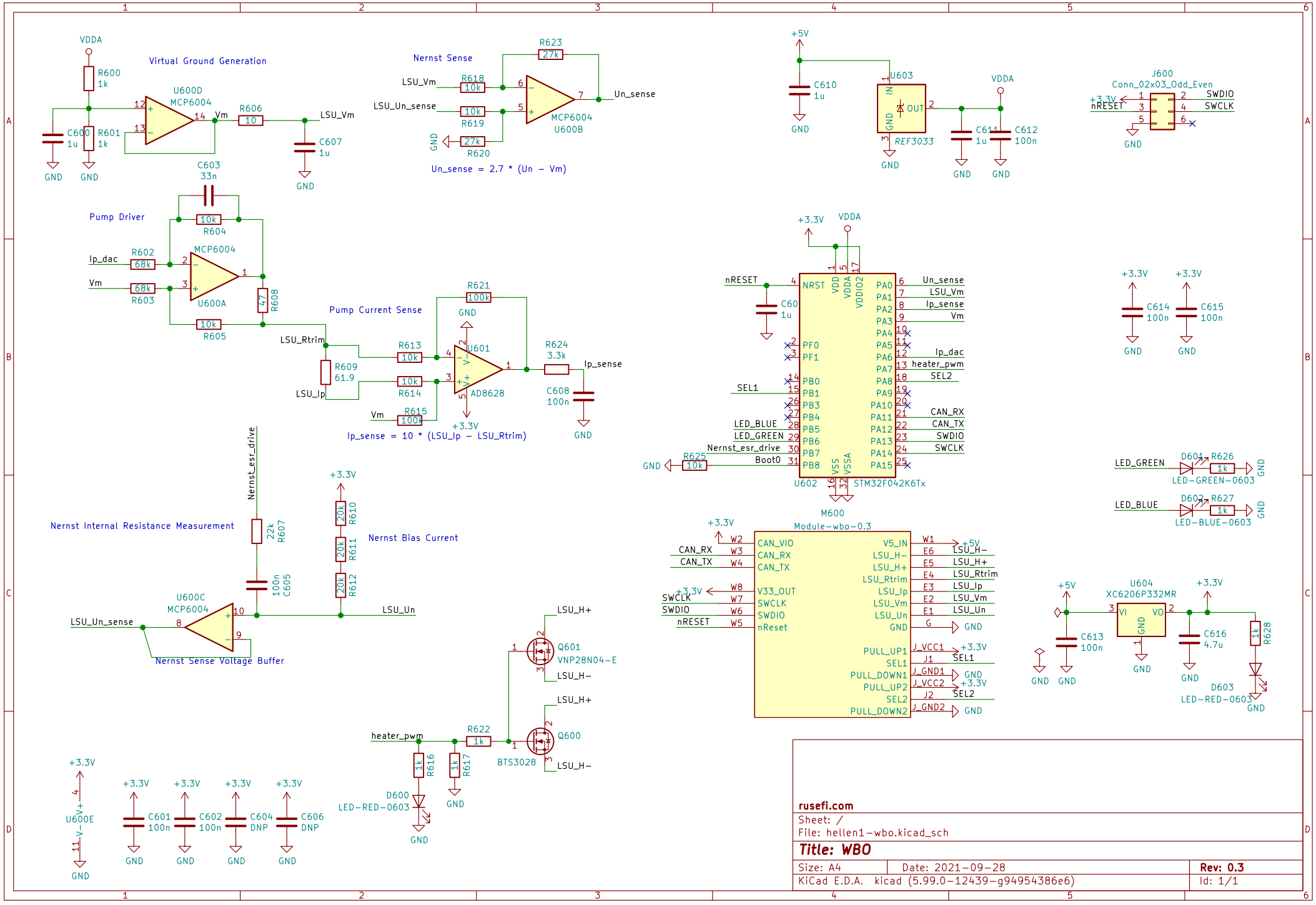
Virtual Ground Generation
VDDA
R600 1k
U600D MCP6004
R606 10
LSU_Vm
C600 1u
R601 1k
C607 1u
GND
Nernst Sense
R623 27k
R618 10k
R619 10k
R620 27k
LSU_Un_sense
Un_sense
U600B
Un_sense = 2.7 * (Un − Vm)
+5V
C610 1u
U603 REF3033
C611 1u
C612 100n
J600 Conn_02x03_Odd_Even
SWDIO
SWCLK
nRESET
Pump Driver
C603 33n
R604 10k
R602 68k
R603 68k
Ip_dac
U600A
R608 47
R605 10k
Pump Current Sense
R621 100k
R613 10k
R614 10k
R615 100
R609 61.9
LSU_Rtrim
LSU_Ip
U601 AD8628
R624 3.3k
C608 100n
Ip_sense
Ip_sense = 10 * (LSU_Ip − LSU_Rtrim)
+3.3V
U602 STM32F042K6Tx
nRESET
C60 1u
NRST
VDD
VDDA
VDDIO2
PA0 Un_sense
PA1 LSU_Vm
PA2 Ip_sense
PA3 Vm
PA6 Ip_dac
PA7 heater_pwm
PA8 SEL2
PA11 CAN_RX
PA12 CAN_TX
PA13 SWDIO
PA14 SWCLK
PF0
PF1
PB0
PB1
PB3
PB4
PB5 LED_BLUE
PB6 LED_GREEN
PB7 Nernst_esr_drive
PB8 Boot0
SEL1
R625 10k
VSS
VSSA
C614 100n
C615 100n
LED_GREEN
D604 LED-GREEN-0603
R626 1k
LED_BLUE
D602 LED-BLUE-0603
R627 1k
Nernst Internal Resistance Measurement
Nernst_esr_drive
R607 22k
C605 100n
Nernst Bias Current
R610 20k
R611 20k
R612 20k
LSU_Un
U600C MCP6004
LSU_Un_sense
Nernst Sense Voltage Buffer
M600 Module-wbo-0.3
CAN_VIO
CAN_RX
CAN_TX
V33_OUT
SWCLK
SWDIO
nReset
V5_IN
LSU_H−
LSU_H+
LSU_Rtrim
LSU_Ip
LSU_Vm
LSU_Un
GND
PULL_UP1
SEL1
PULL_DOWN1
PULL_UP2
SEL2
PULL_DOWN2
J_VCC1
J_GND1
J_VCC2
J_GND2
Q601 VNP28N04-E
Q600 BTS3028
heater_pwm
R622 1k
R616 1k
R617 1k
D600 LED-RED-0603
U604 XC6206P332MR
C613 100n
C616 4.7u
R628 1k
D603 LED-RED-0603
U600E
C601 100n
C602 100n
C604 DNP
C606 DNP
rusefi.com
Sheet: /
File: hellen1-wbo.kicad_sch
Title: WBO
Size: A4
Date: 2021-09-28
Rev: 0.3
KiCad E.D.A. kicad (5.99.0-12439-g94954386e6)
Id: 1/1

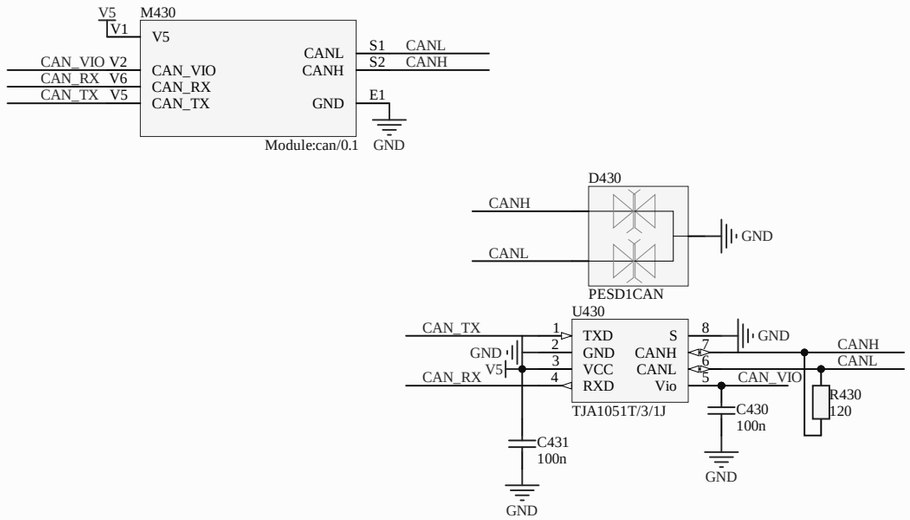

Title: ***Hellen-One CAN***			***rusEFI EMS*** ***Hellen-One Platform*** *https://rusefi.com/s/hellen72*
Size: A3	Author: andreika	Revision: 0.1	
Date: 02.03.2021		Sheet 1 of 1	