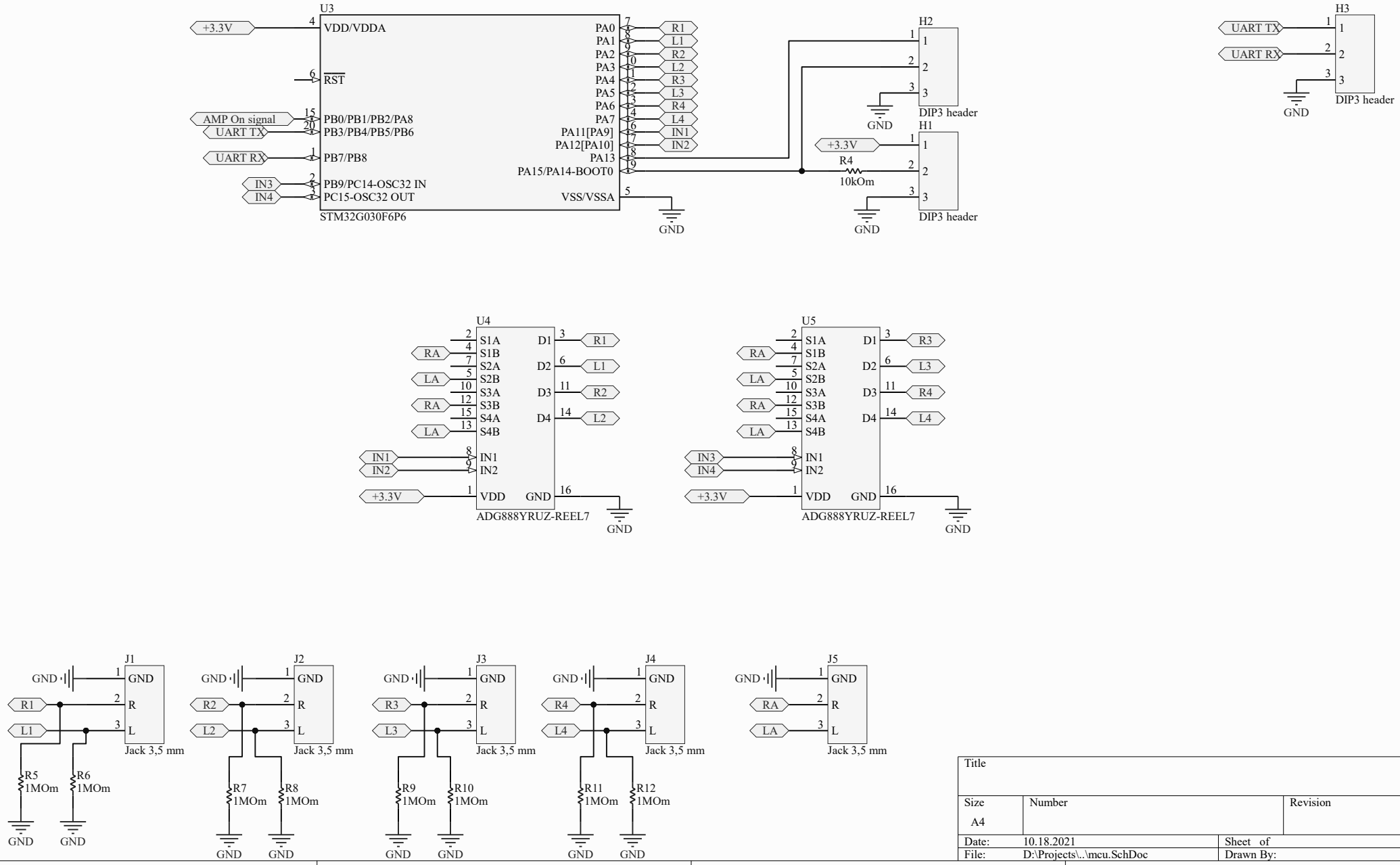

Title		
Size A4	Number	Revision
Date: 10.18.2021		Sheet of
File: D:\Projects\..\mcu.SchDoc		Drawn By: