Power Switching & Inrush Current Limit

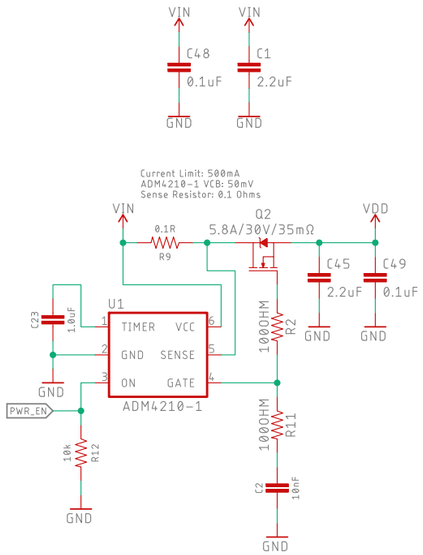

Voltage Regulation

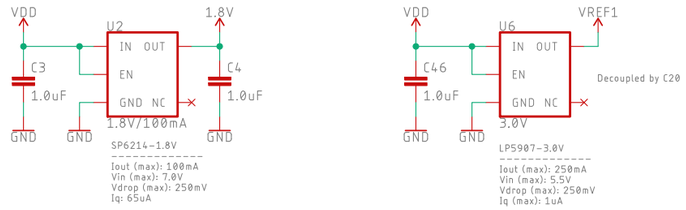

Antenna Switch

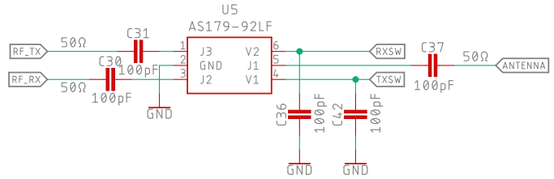

Antenna

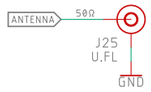

Gain Opto-Isolation

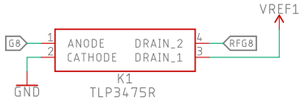

Pads & Can

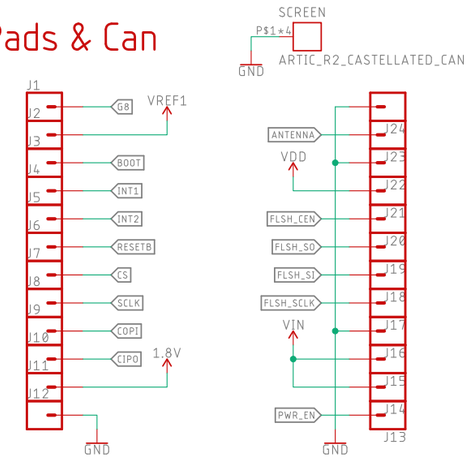

ARTIC R2

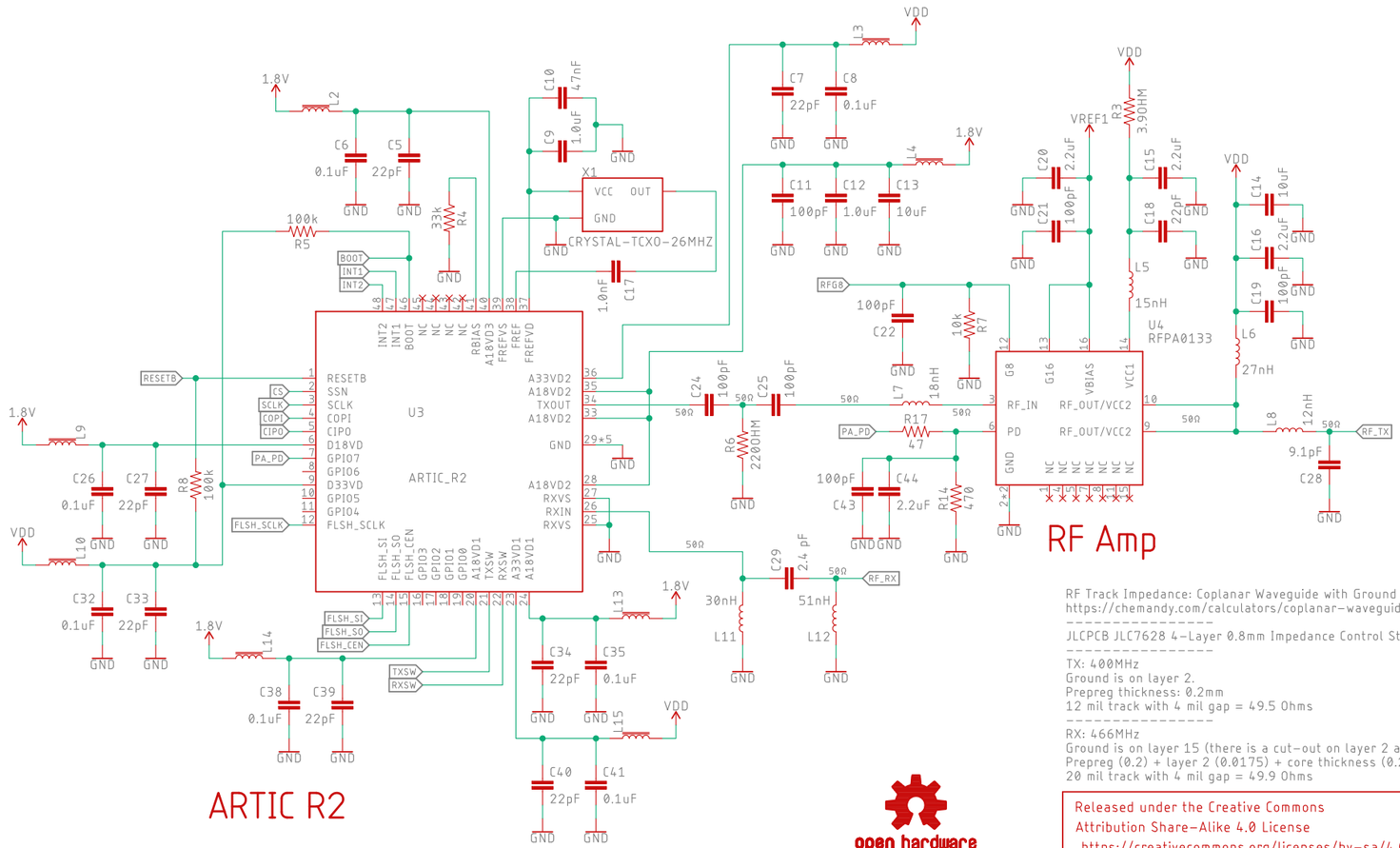

RF Amp

RF Track Impedance: Coplanar Waveguide with Ground Calculations
https://chemandy.com/calculators/coplanar-waveguide-with-ground-calculator.htm
---
JLCPCB JLC7628 4-Layer 0.8mm Impedance Control Stackup (Er = 4.6)

TX: 400MHz
Ground is on layer 2.
Prepreg thickness: 0.2mm
12 mil track with 4 mil gap = 49.5 Ohms

RX: 466MHz
Ground is on layer 15 (there is a cut-out on layer 2 as per AnSem's design guide).
Prepreg (0.2) + layer 2 (0.0175) + core thickness (0.265) = 0.4825mm
20 mil track with 4 mil gap = 49.9 Ohms

open hardware

Special Instructions

Released under the Creative Commons
Attribution Share-Alike 4.0 License
https://creativecommons.org/licenses/by-sa/4.0/

TITLE: ARTIC_R2_Module

Design by: Paul Clark
Based on the Icoteq Reference Design

REV: X01

Date: 15/12/2020 12:38

Sheet: 1/1